GENERATOR PROTECTION

Fundamentals and Application

San Francisco Chapter

Electrical Workshop: Measurement, Safety, and Protection

"Knowledge is Power. Protect Your Important Assets!"

Friday, May 29, 2015

Presented by:

BECKWITH ELECTRIC CO.INC.

6190 118th Avenue North, Largo, FL 33773 • (727) 544-2326 • www.BeckwithElectric.com
Products Defined by You, Refined by Beckwith

BECKWITH ELECTRIC CO. INC.

Presenter Contact Info

Wayne Hartmann

VP, Protection and Smart Grid Solutions

Beckwith Electric Company

whartmann@beckwithelectric.com

904-238-3844

Wayne Hartmann is VP, Protection and Smart Grid Solutions for Beckwith Electric. He provides Customer and Industry linkage to Beckwith Electric's solutions, as well as contributing expertise for application engineering, training and product development.

Before joining Beckwith Electric, Wayne performed in application, sales and marketing management capacities with PowerSecure, General Electric, Siemens Power T&D and Alstom T&D. During the course of Wayne's participation in the industry, his focus has been on the application of protection and control systems for electrical generation, transmission, distribution, and distributed energy resources.

Wayne is very active in IEEE as a Senior Member serving as a Main Committee Member of the IEEE Power System Relaying Committee for 25 years. His IEEE tenure includes having chaired the Rotating Machinery Protection Subcommittee ('07-'10), contributing to numerous standards, guides, transactions, reports and tutorials, and teaching at the T&D Conference and various local PES and IAS chapters. He has authored and presented numerous technical papers and contributed to McGraw-Hill's "Standard Handbook of Power Plant Engineering, 2nd Ed."

1

Objectives

- Review of generator construction and operation
- Review grounding and connections
- Discuss IEEE standards for generator protection
- Explore generator elements
  - Internal faults (in the generator zone)
  - Abnormal operating conditions
    - Generator zone
    - Out of zone (system)
  - External faults
- Discuss generator and power system interaction

2

Objectives

- Tripping considerations and sequential tripping
- Discussion of tactics to improve security and dependability
- Generator protection upgrade considerations
  - Advanced attributes for security, reliability and maintenance use
- Review Setting, Commissioning and Event Investigation Tools
- Q & A

3

Generator Construction: Simple Bock Diagram

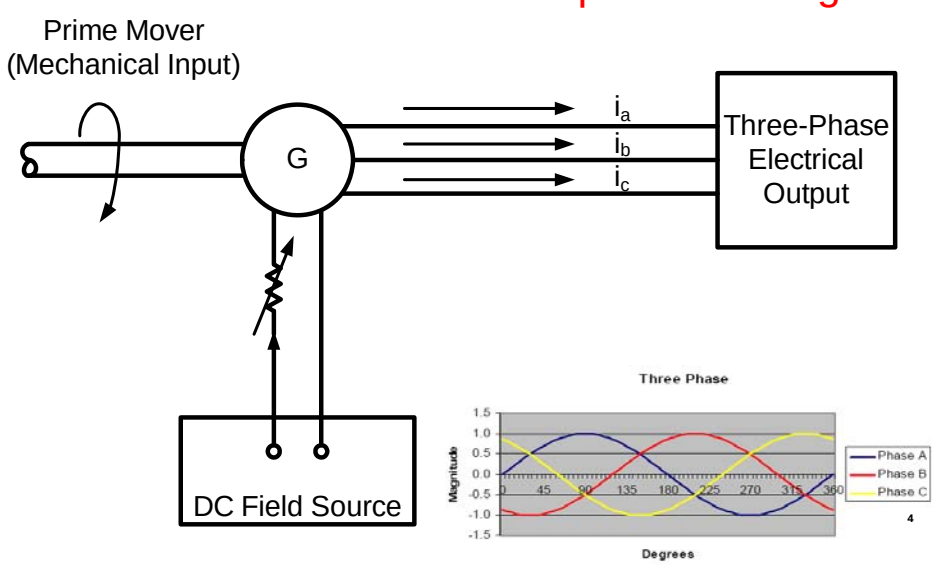

4

Applying Mechanical Input

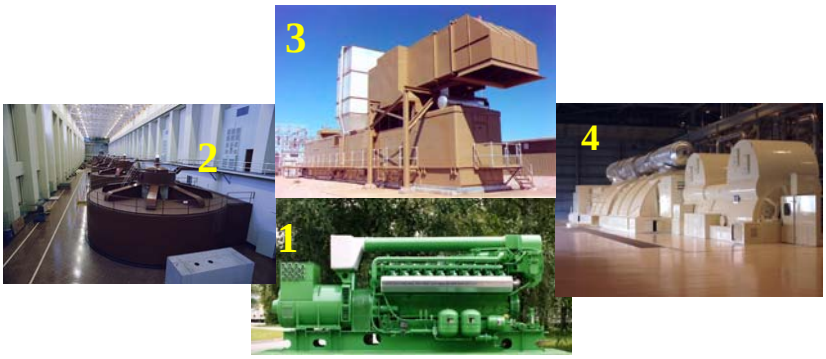

1. Reciprocating Engines
2. Hydroelectric
3. Gas Turbines (GTs, CGTs)
4. Steam Turbines (STs)

5

Applying Field

Static Exciter

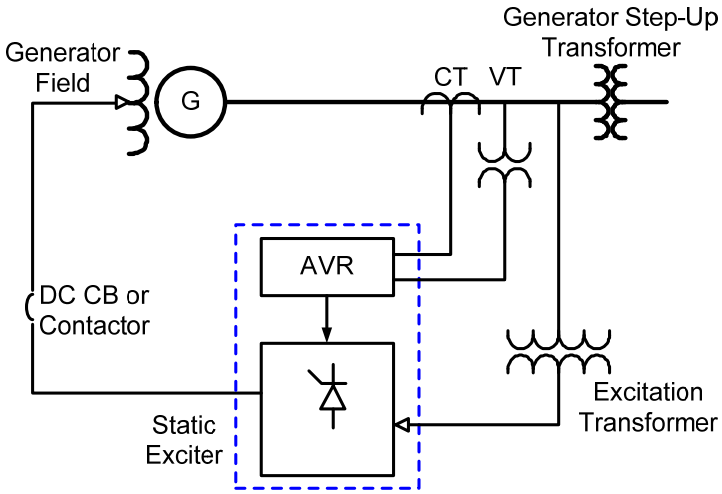

- DC is induced in the rotor
- AC is induced in the stator

6

Rotor Styles

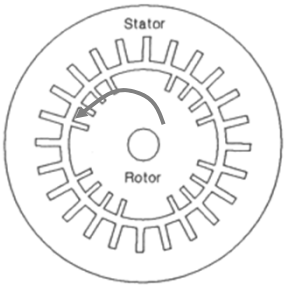

Cylindrical (Round)

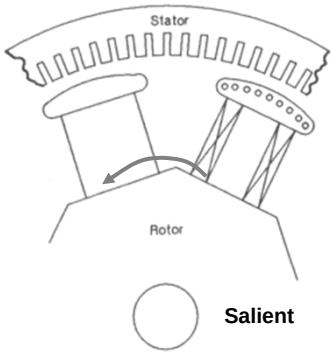

Salient

- Cylindrical rotor seen in Recips, GTs and STs
- Salient pole rotor seen in Hydros
  - More poles to obtain nominal frequency at low RPM
  - Eq: f= [RPM/60] * [P/2] = [RPM * P] / 120

7

Cylindrical Rotor & Stator

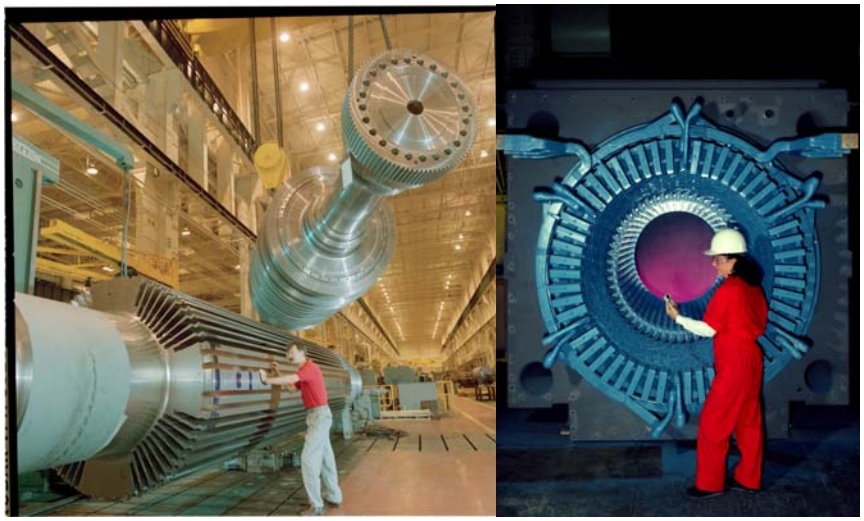

8

Cylindrical Rotor & Stator

9

Cylindrical Rotor & Stator

10

Salient Pole Rotor & Stator

11

Salient Pole Rotor & Stator

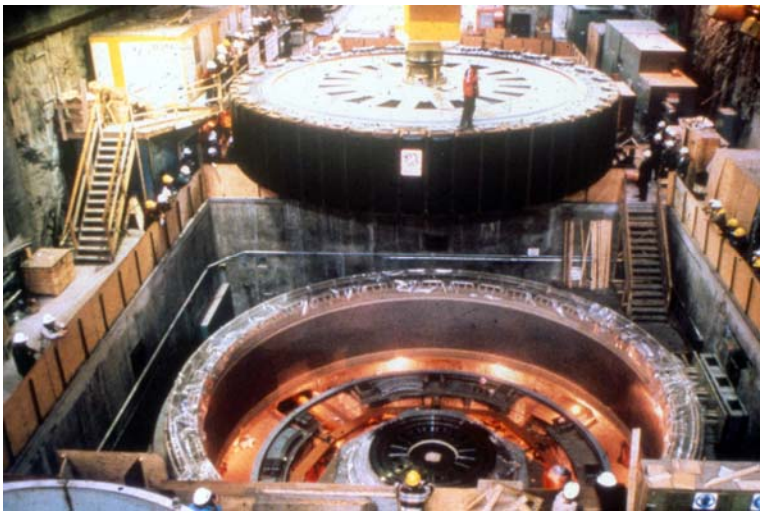

12

Generator Behavior During Short Circuits

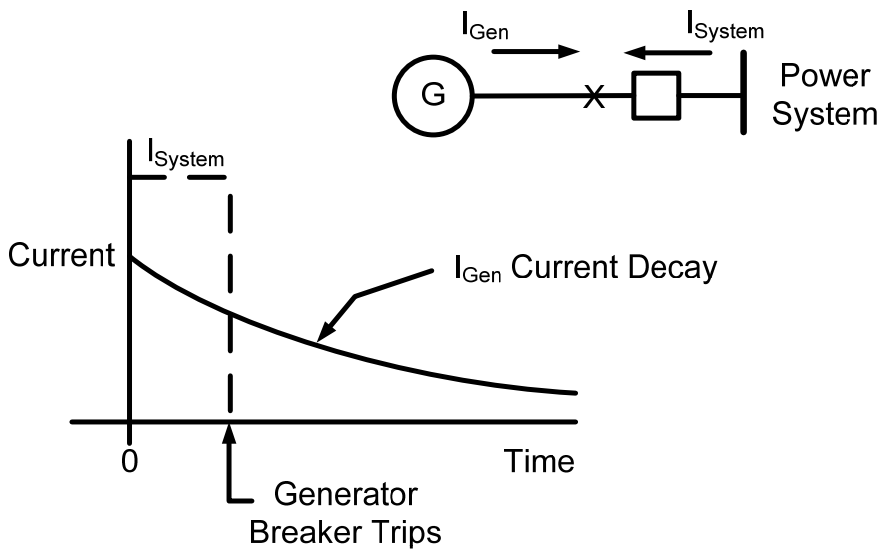

13

Generator Short-Circuit Current Decay

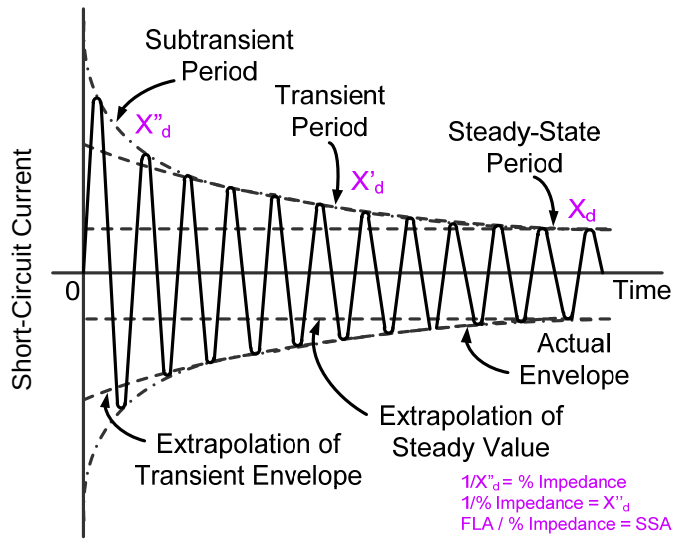

14

Effect of DC Offsets

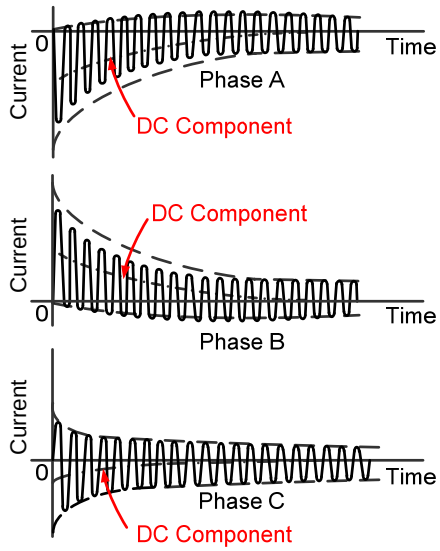

15

Grounding Techniques

- Why Ground?
  - Improved safety by allowing detection of faulted equipment
  - Stop transient overvoltages
    - Notorious in ungrounded systems
  - Ability to detect a ground fault before a multiphase to ground fault evolves
  - If impedance is introduced, limit ground fault current and associated damage faults
  - Provide ground source for other system protection (other zones supplied from generator)

16

Types of Generator Grounding

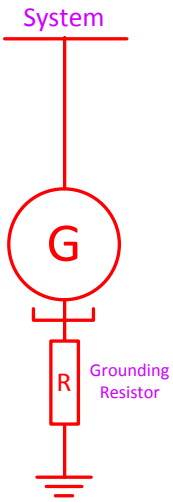

- Low Impedance
  - Good ground source
    - The lower the R, the better the ground source
    - The lower the R, the more damage to the generator on internal ground fault
  - Can get expensive as resistor voltage rating goes up
  - Generator will be damaged on internal ground fault
    - Ground fault current typically 200-400 A

17

Types of Generator Grounding

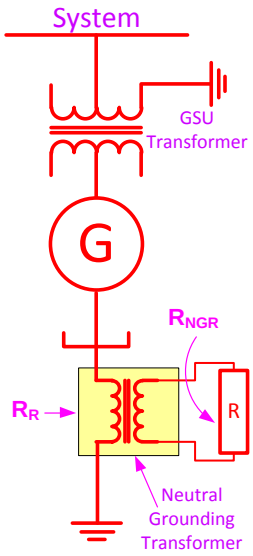

- High Impedance
  - Creates "unit connection"
  - System ground source obtained from GSU
  - Uses principle of reflected impedance
    - Eq: $R_{NGR} = R_R / [V_{pri}/V_{sec}]^2$
      - R_{NGR} = Neutral Grounding Resistor Resistance
      - R_R = Reflected Resistance
    - Ground fault current typically <=10A

18

Types of Generator Grounding

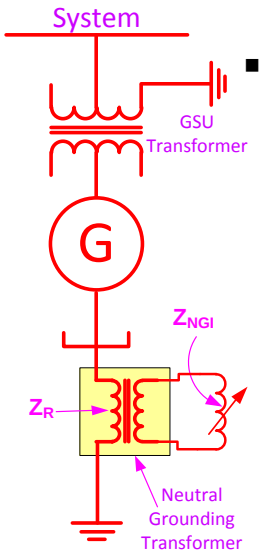

- Compensated
  - Creates "unit connection"
  - Most expensive
    - Tuned reactor, plus GSU and Grounding Transformers
  - System ground source obtained from GSU
  - Uses reflected impedance from grounding transformer, same as high impedance grounded system does
  - Generator damage mitigated from ground fault
  - Reactor tuned against generator capacitance to ground to limit ground fault current to very low value (can be less than 1A)

19

Types of Generator Grounding

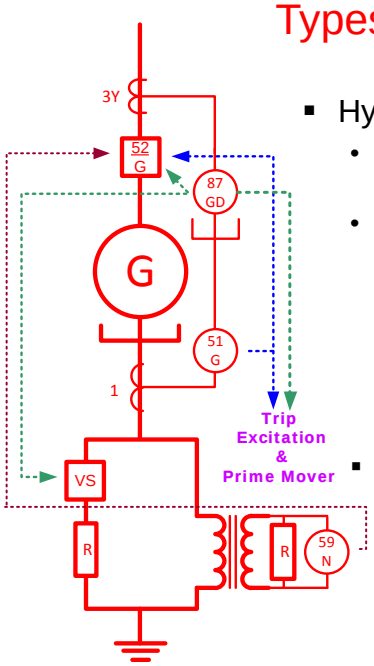

- Hybrid Impedance Grounding
  - Has advantages of Low-Z and High-Z ground
  - Normal Operation
    - Low-Z grounded machine provides ground source for other zones under normal conditions
      - 51G acts as back up protection for uncleared system ground faults
      - 51G is too slow to protect generator for internal fault
- Ground Fault in Machine
  - Detected by the 87GD element
  - The Low-Z ground path is opened by a vacuum switch
  - Only High-Z ground path is then available
    - The High-Z ground path limits fault current to approximately 10A (stops generator damage)

20

Types of Generator Grounding

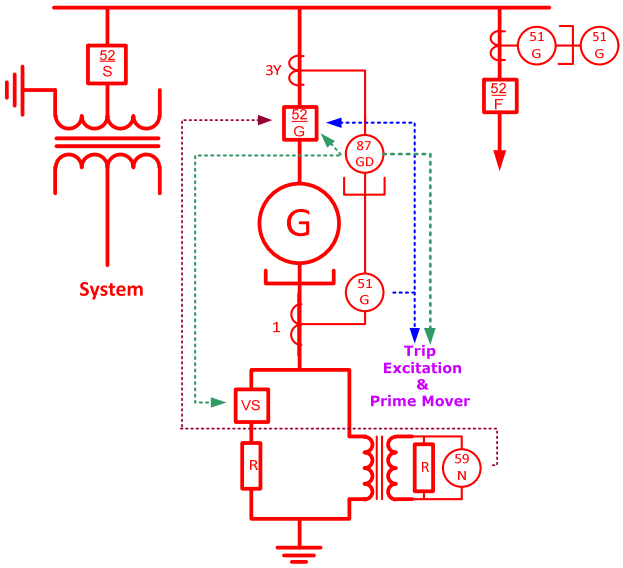

21

Types of Generator Ground Fault Damage

- Following pictures show stator damage after an internal ground fault
- This generator was high impedance grounded, with the fault current less than 10A
- Some iron burning occurred, but the damage was repairable
- With low impedance grounded machines the damage is severe

22

Stator Ground Fault Damage

(only 10A for 60 cycles)

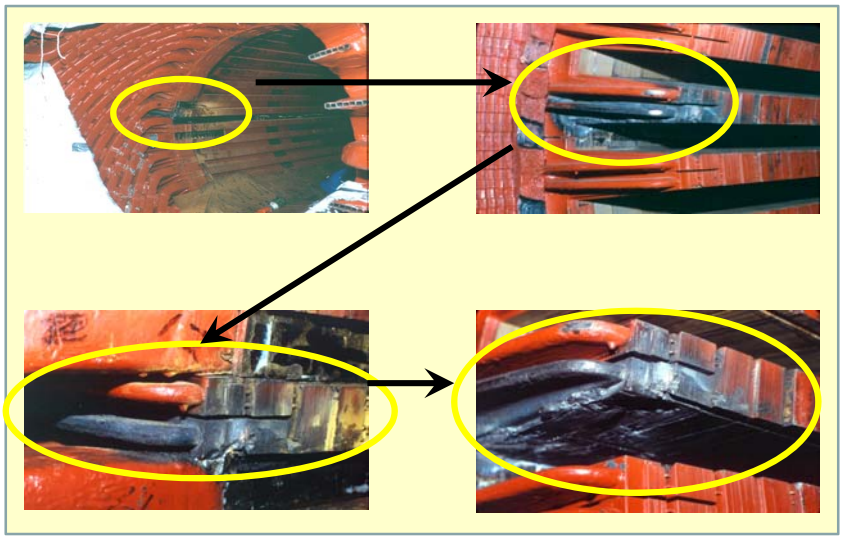

23

Types of Generator Connections

- **Bus or Direct Connected (typically Low Z)**
  - Directly connected to bus
  - Likely in industrial, commercial, and isolated systems
  - Simple, inexpensive

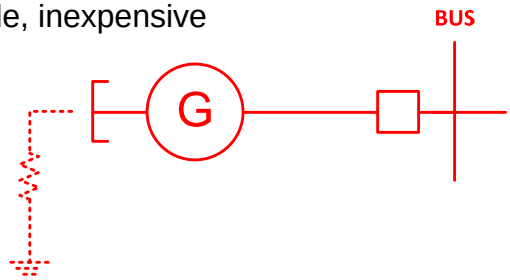

24

Types of Generator Connections

- **Multiple Direct or Bus Connected (No/Low Z/High Z)**
  - Directly connected to bus
  - Likely in industrial, commercial, and isolated systems
  - Simple
  - May have problems with circulating current
    - Use of single grounded machine can help
  - Adds complexity to discriminate ground fault source

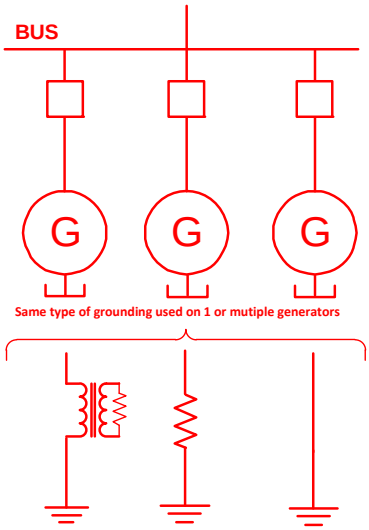

25

Bus (Direct) Connected

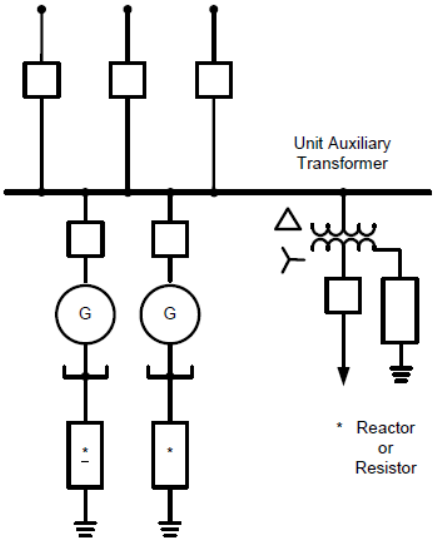

26

Types of Generator Connections

- **Unit Connected (High Z)**
  - Generator has dedicated unit transformer
  - Generator has dedicated ground transformer
  - Likely in large industrial and utility systems
  - 100% stator ground fault protection available

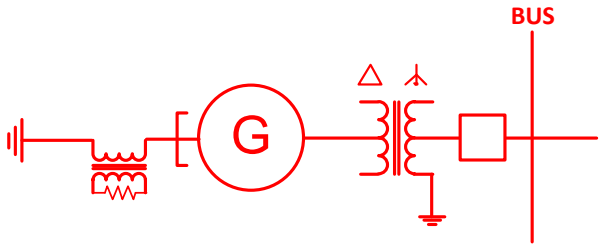

27

Types of Generator Connections

- **Multiple Bus (High Z), 1 or Multiple Generators**
  - Connected through one unit xfmr
  - Likely in large industrial and utility systems
  - No circulating current issue
  - Adds complexity to discriminate ground fault source
    - Special CTs needed for sensitivity, and directional ground overcurrent elements

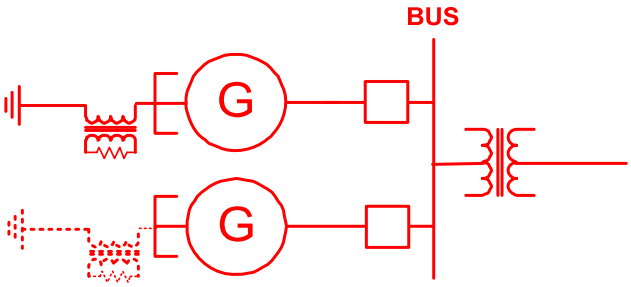

28

Unit Connected

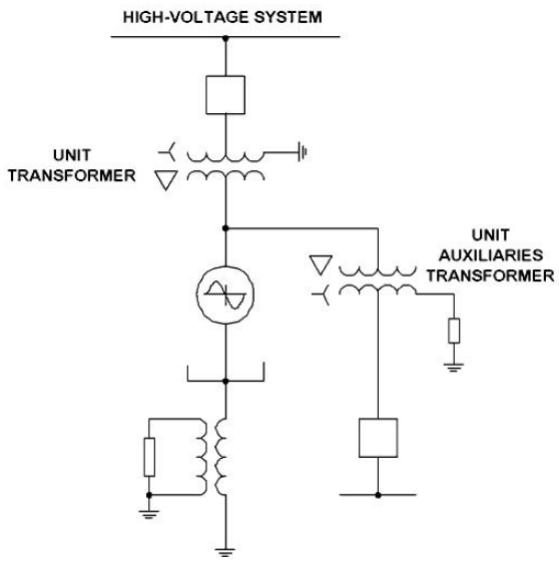

29

Generator Protection Overview

- Generators experience shorts and abnormal electrical conditions
- Proper protection can mitigate damage to the machine
- Proper protection can enhance generation security
- Generator Protection:
  - Shorts circuits in the generator
  - Uncleared faults on the system
  - Abnormal electrical conditions may be caused by the generator or the system

30

Generator Protection Overview

- Short Circuits
  - In Generator
    - Phase Faults
    - Ground Faults
  - On System
    - Phase Faults
    - Ground Faults

31

Generator Protection Overview

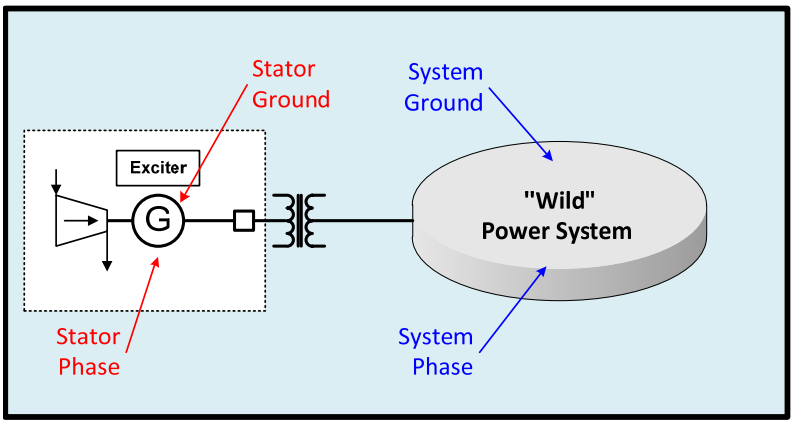

Internal and External Short Circuits

32

Generator Protection Overview

- Abnormal Operating Conditions
  - Abnormal Frequency
  - Abnormal Voltage
  - Overexcitation
  - Field Loss
  - Loss of Synchronism
  - Inadvertent Energizing
  - Breaker Failure
  - Loss of Prime Mover
  - Blown VT Fuses
  - Open Circuits / Conductors

33

Generator Protection Overview

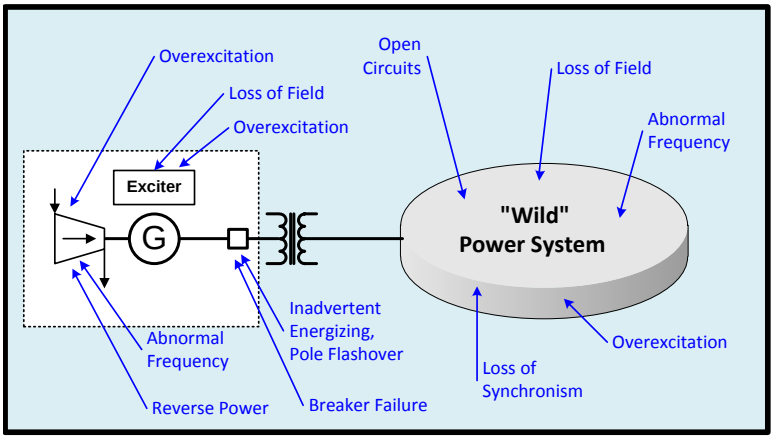

Abnormal Operating Conditions

34

ANSI/IEEE Standards

- **Latest developments reflected in:**
  - Std. 242: Buff Book
  - C37.102: IEEE Guide for Generator Protection
  - C37.101: IEEE Guide for AC Generator Ground Protection
  - C37.106: IEEE Guide for Abnormal Frequency Protection for Power Generating Plants

These are created/maintained by the IEEE PES PSRC & IAS

35

Typical Unit Connected Generator (C37.102)

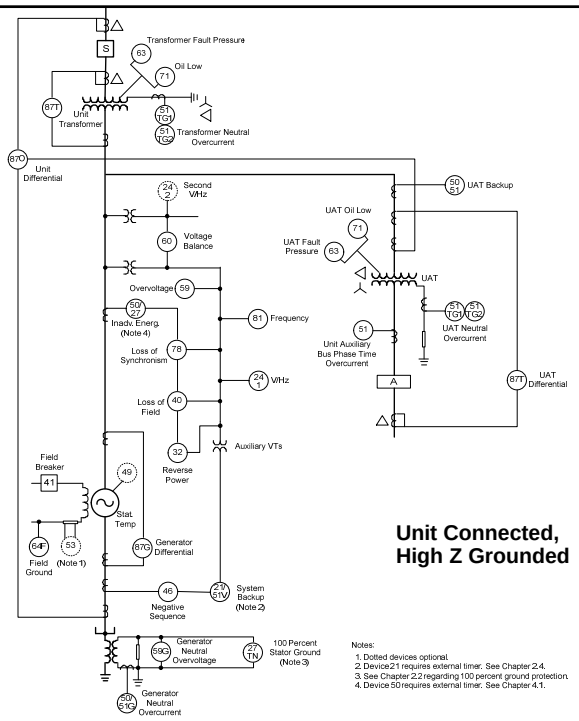

Unit Connected, High Z Grounded

Notes:
1. Dotted devices optional.
2. Device 21 requires external timer. See Chapter 2.4.
3. See Chapter 2.2 regarding 100 percent ground protection.
4. Device 50 requires external timer. See Chapter 4.1.

36

Stator Ground Fault

- Traditional stator ground fault protection schemes include:
  - Neutral overvoltage
  - Various third harmonic voltage-dependent schemes
- These exhibit sensitivity, security and clearing speed issues that may subject a generator to prolonged low level ground faults that may evolve into damaging faults

37

Neutral Overvoltage (59G)

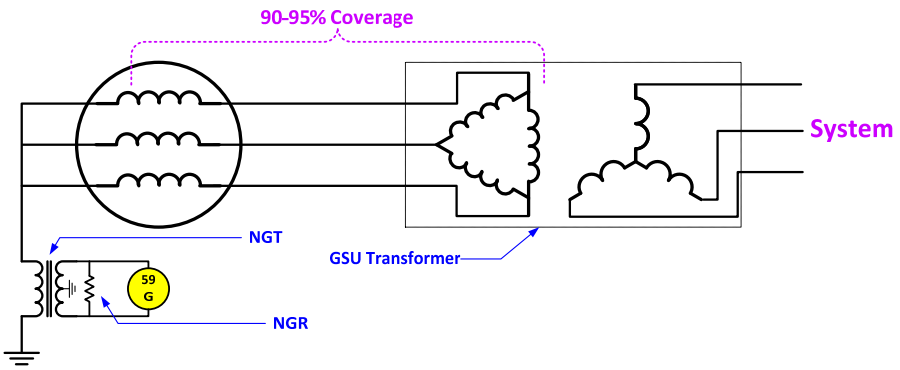

- 59G provides 95% stator winding coverage

38

59N Element

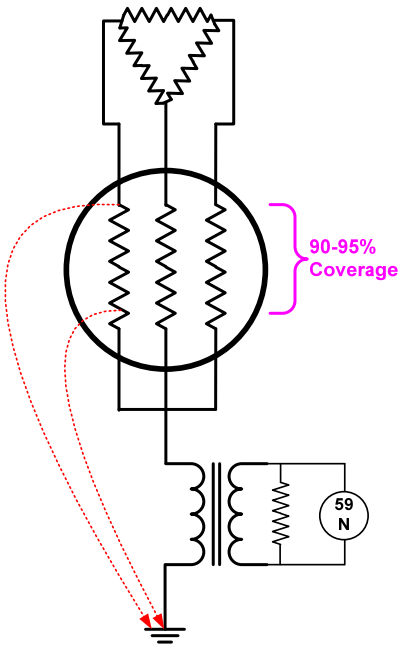

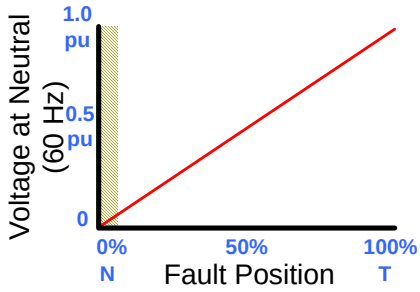

- **Neutral grounding transformer (NGT) ratio selected that provides 120 to 240V for ground fault at machine terminals**
  - **Max L-G volts =13.8kV / 1.73 = 7995V**
  - **Max NGT volts sec. = 7995V / 120V = 66.39 VTR**

39

59G System Ground Fault Issue

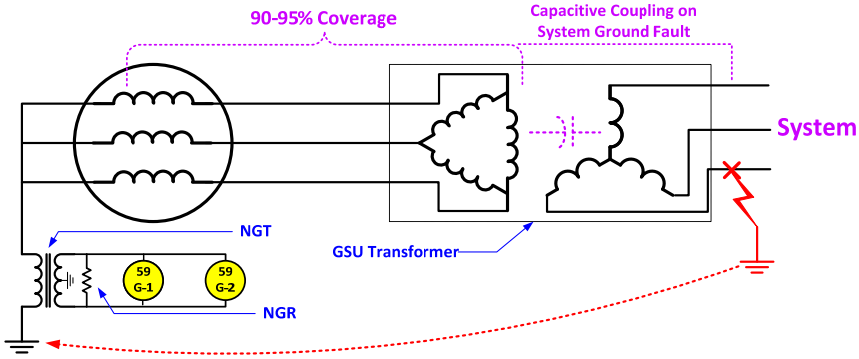

- GSU provides capacitive coupling for system ground faults into generator zone
- Use two levels of 59G with short and long time delays for selectivity
- <u>Cannot</u> detect ground faults at/near the neutral (very important)

40

Multiple 59G Element Application

- **59G-1** is blind to the capacitive coupling by the GSU.
  - Short time delay

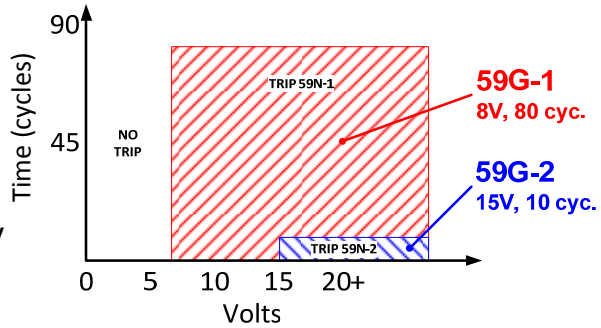

- **59G-2 is set to 5%, which may include the effects of capacitive coupling by the GSU**
  - **Long time delay**

41

Use of Symmetrical Component Quantities to Supervise 59G Tripping Speed

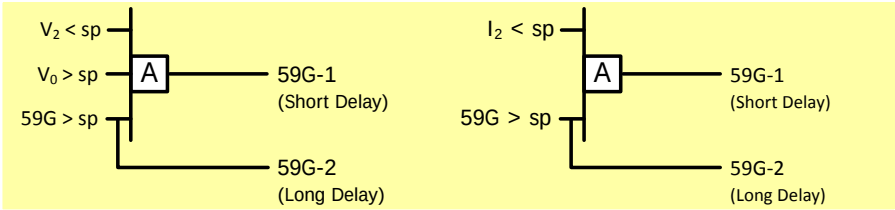

- Both V_2 and I_2 implementation have been applied
  - A ground fault in the generator zone produces primarily zero sequence voltage
  - A fault in the VT secondary or system (GSU coupled) generates negative sequence quantities in addition to zero sequence voltage

42

Intermittent Arcing Ground Fault Turned Multiphase

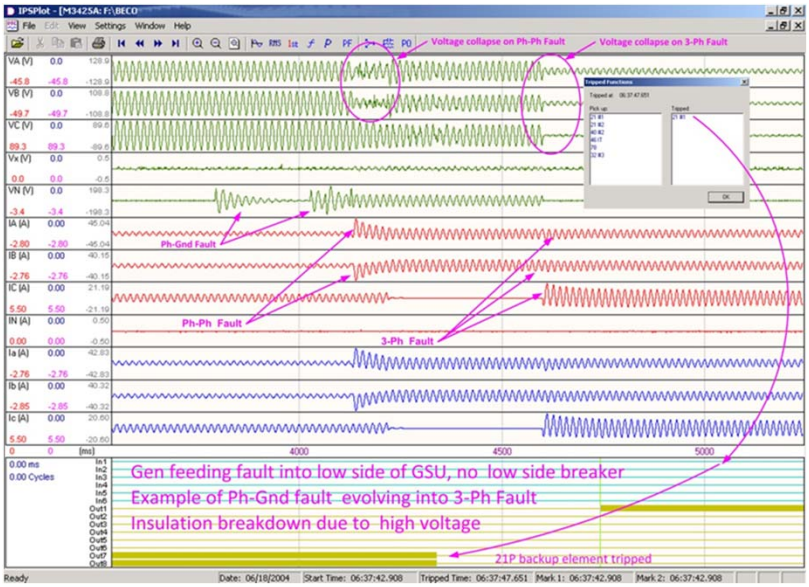

43

59G/27TN Timing Logic

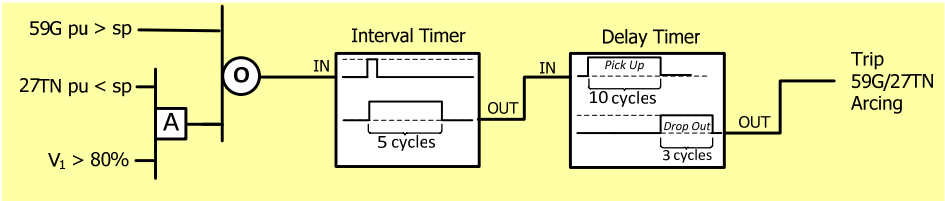

Interval and Delay Timers used together to detect intermittent pickups of arcing ground fault

44

59N Element

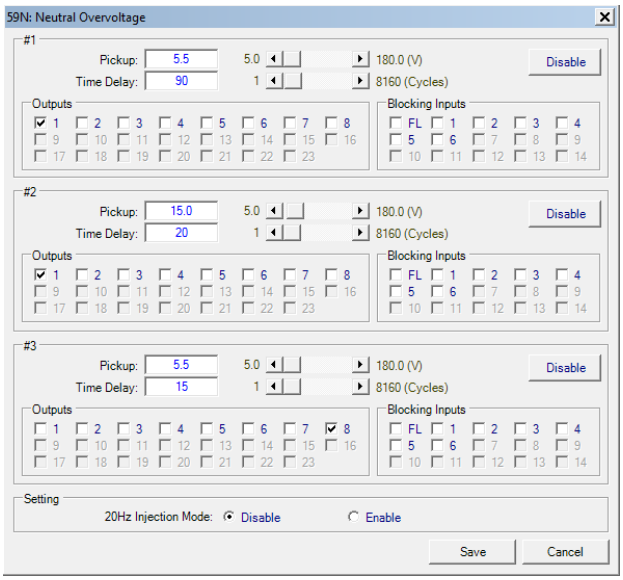

45

Why Do We Care About Faults Near Neutral?

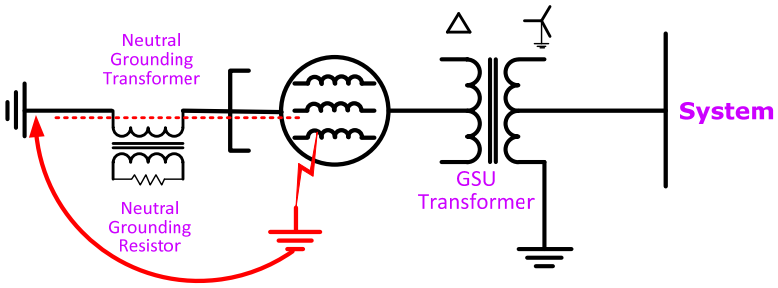

- A fault at or near the neutral shunts the high resistance that saves the stator from large currents with an internal ground fault
- A generator operating with an undetected ground fault near the neutral is a accident waiting to happen
- We can use 3rd Harmonic or Injection Techniques for complete (100%) coverage

46

Generator Capacitance and 3rd Harmonics

- 3rd harmonics are produced by some generators
  - Amount typically small
    - Lumped capacitance on each stator end is $C_S/2$.
  - C_T is added at terminal end due to surge caps and isophase bus
  - Effect is 3rd harmonic null point is shifted toward terminal end and not balanced

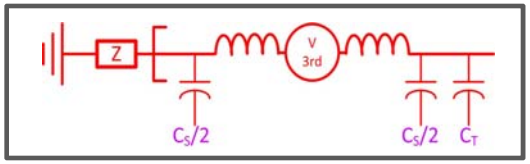

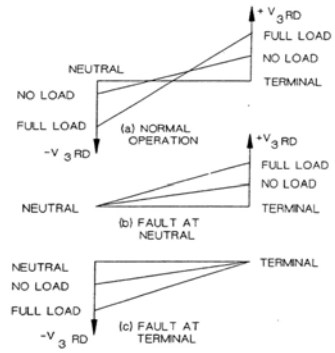

47

Third-Harmonic Rotor Flux

- **Develops in stator due to imperfections in winding and system connections**
- **Unpredictable amount requiring field observation at various operating conditions**
- **Also dependent on pitch of the windings, which a method to define the way stator windings placed in the stator slots**

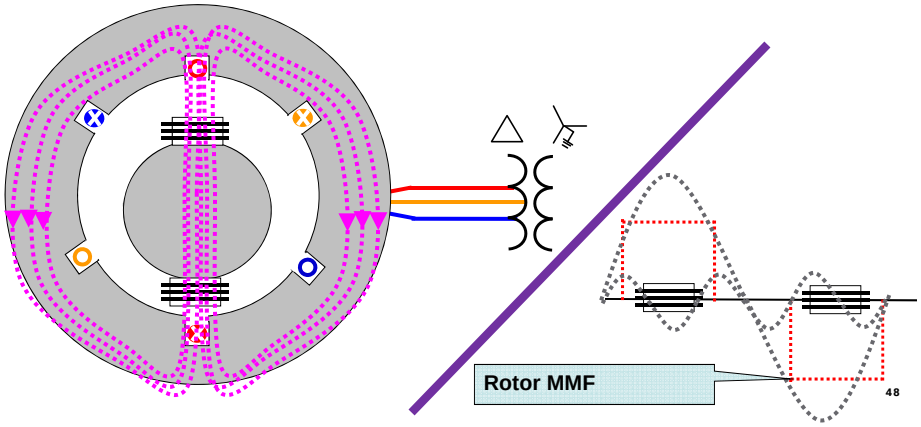

48

Using Third Harmonic in Generators

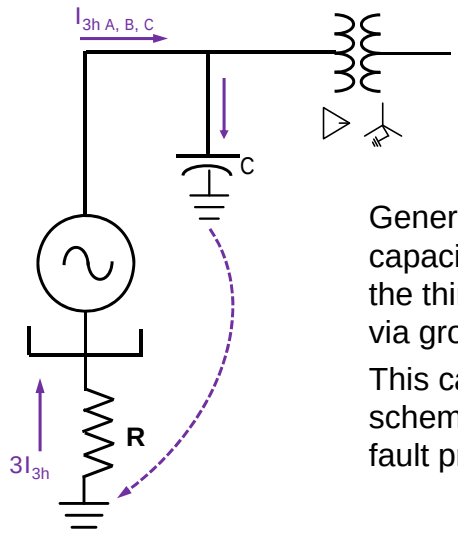

Generator winding and terminal capacitances (C) provide path for the third-harmonic stator current via grounding resistor

This can be applied in protection schemes for enhanced ground fault protection coverage

49

3rd Harmonic Undervoltage (27TN)

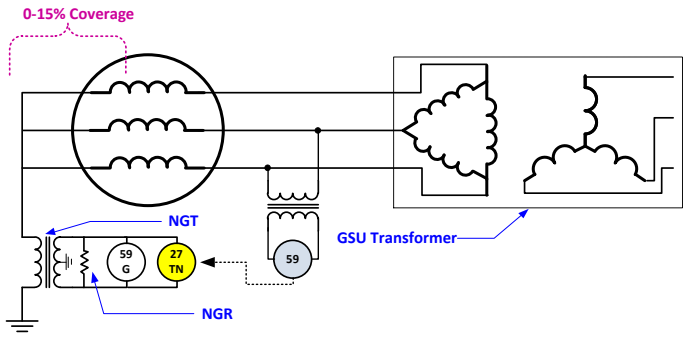

- A fault near the neutral shunts the 3rd harmonic near the neutral to ground
- Result is a third harmonic undervoltage
- Security issues with generator operating mode and power output (real and reactive)

50

3rd Harmonic in Generators: Typical 3rd Harmonic Values

UNIT LOAD		180 HZ RMS VOLTAGE		VOLTAGE RATIO
MW	MVAR	NEUTRAL	TERMINAL	TERMINAL/NEUTRAL
0	0	2.8	2.7	1.08
7	0	2.5	3.7	1.48
35	5	2.7	3.8	1.41
105	5	4.2	5.0	1.19
175	25	5.5	6.2	1.13
340	25	8.0	8.0	1.00

Magnitudes of Third Harmonic Voltages for a Typical Generator

- **3rd harmonic values tend to increase with power and VAr loading**
- **Fault near neutral causes 3rd harmonic voltage at neutral to go to zero volts**

51

Example 3rd Harmonic Plot: Effects of MW and MVAR Loading

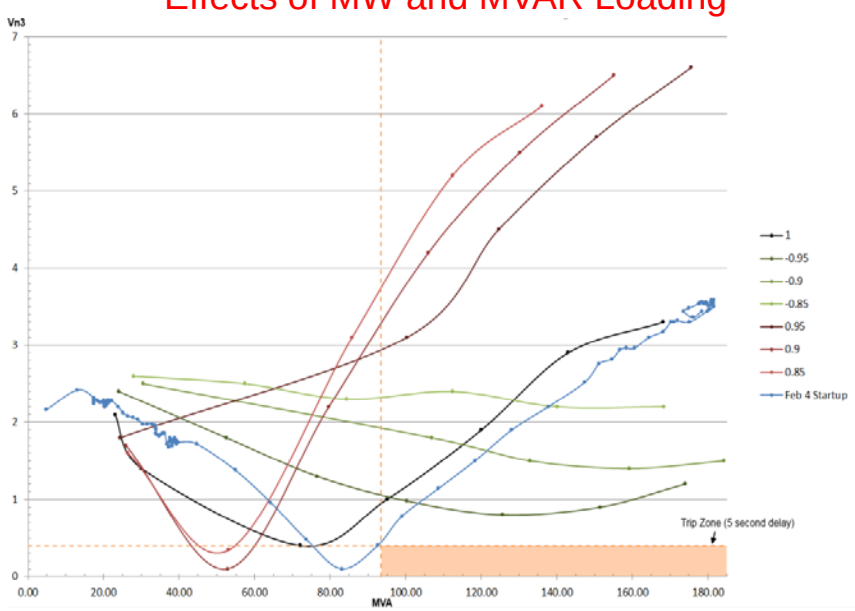

52

3rd Harmonic Voltages and Ratio Voltage

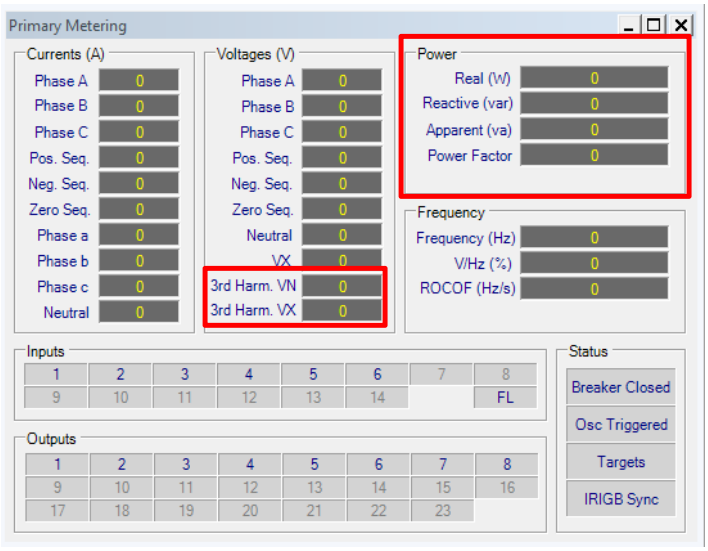

53

27TN – 3rd Harmonic Neutral Undervoltage

- Provides 0-15% stator winding coverage (typ.)
- Tuned to 3rd harmonic frequency
- Provides two levels of setpoints
- Supervisions for increased security under various loading conditions: Any or All May be Applied Simultaneously

- Phase Overvoltage Supervision
- Underpower Block
- Forward & Reverse
- Under VAr Block; Lead & Lag
- Power Factor Block; Lead & Lag
- Definable Power Band Block

- Undervoltage/No Voltage Block
- Varies with load
- May vary with power flow direction
- May vary with level
- May vary with lead and lag
- May be gaps in output

Loading/operating variables may be Sync Condenser, VAr Sink, Pumped Storage, CT Starting, Power Output Reduction

54

27TN Settings and Supervision

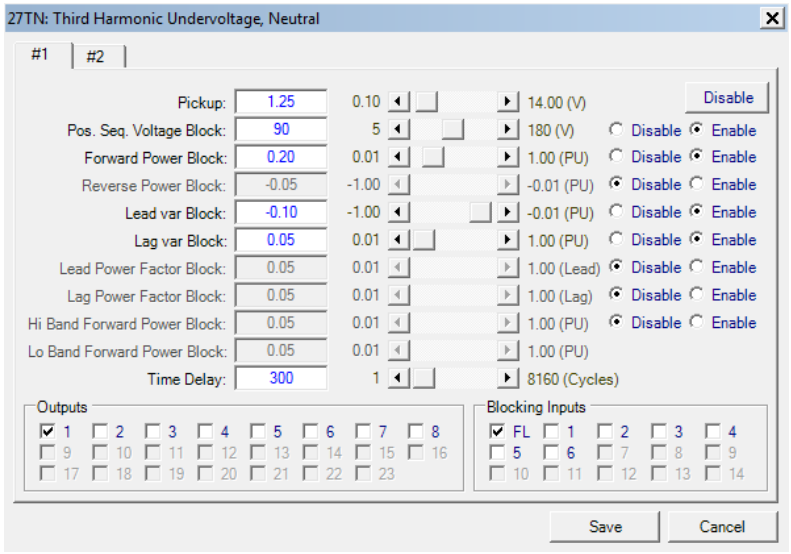

55

100% Stator Ground Fault (59N/27TN)

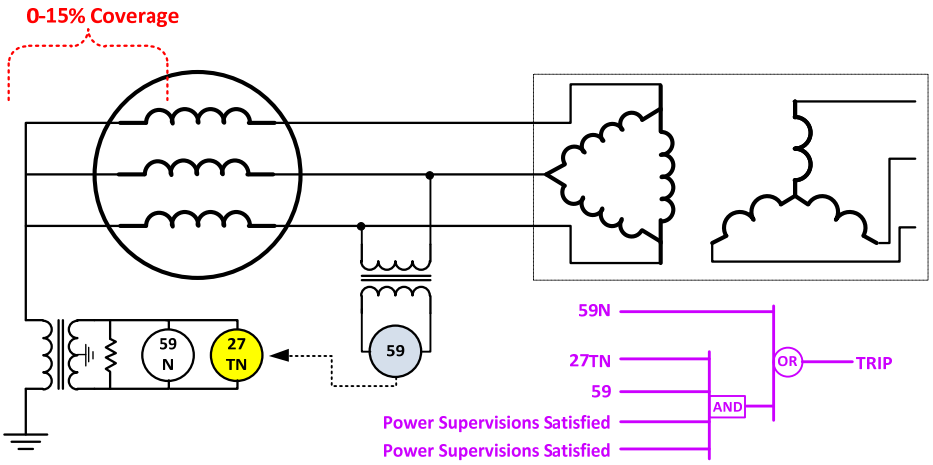

56

Third-Harmonic Undervoltage Ground-Fault Protection Scheme

100% Stator Ground Fault (59N/27TN)

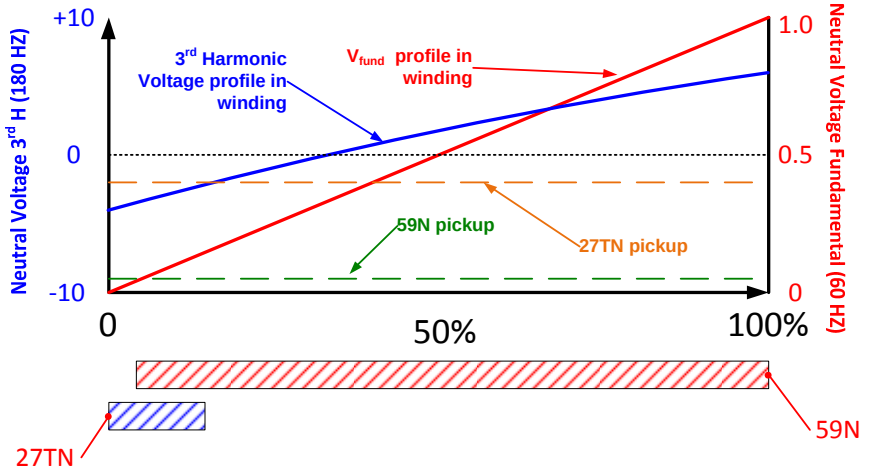

57

Overlap of Third Harmonic (27TN) with 59N Relay

59D – 3rd Harmonic Ratio Voltage

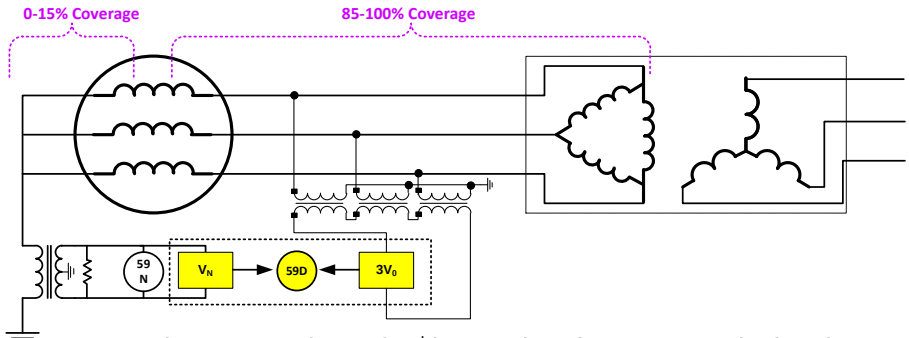

- Employs comparison of 3rd harmonic voltages at terminal and neutral ends
- These voltages are fairly close to each other
- One goes very low if a ground fault occurs at either end of the winding

58

59D – 3rd Harmonic Ratio Voltage

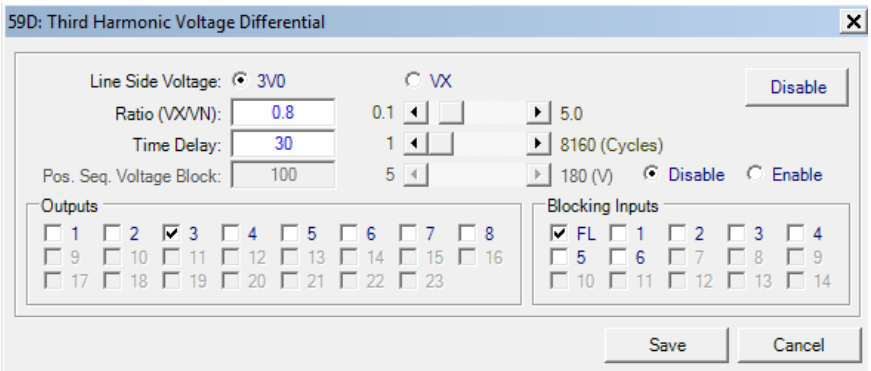

59

Stator Ground Faults: 59N, 27TN, 59D

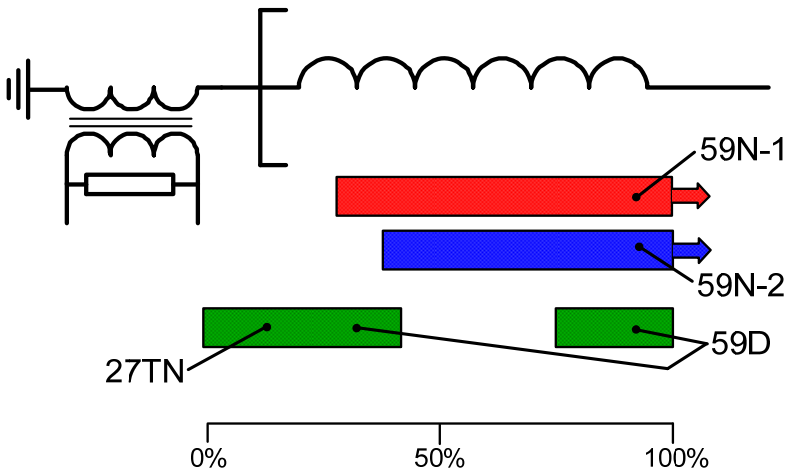

60

3rd Harmonic Voltage Decrease During an Over Speed Condition in a 45MW Hydro Generator

- Typical value of 3rd harmonic (V3rd) is around 1.7V, 27TN set to pick up at 1.1V.
- A line breaker tripped isolating plant, and they experienced a 27TN operation.
- Oscillograph shows the V3rd decreased from 1.7V to 1.0V as the frequency went from 60 Hz to 66Hz, (only 110% over speed).
- This is well below the 180-200% over speed condition that is often cited as possible with hydros upon full load rejection.
- What happens to 59N?

61

3rd Harmonic in Hydro Generators

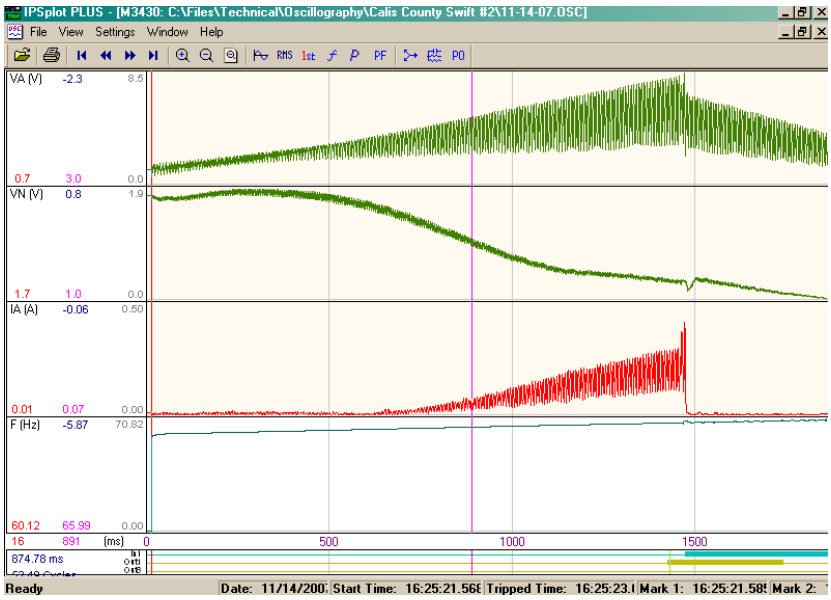

62

Subharmonic Injection: 64S

- 20Hz injected into grounding transformer secondary circuit
- Rise in real component of injected current suggests resistive ground fault
- Ignores capacitive current due to isophase bus and surge caps
  - Uses it for self-diagnostic and system integrity

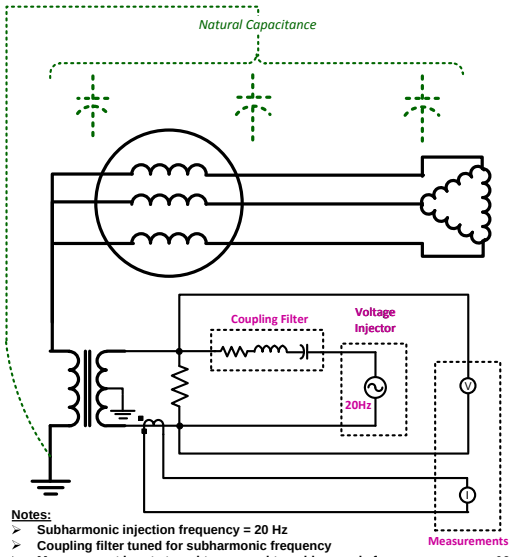

Notes:
- Subharmonic injection frequency = 20 Hz
- Coupling filter tuned for subharmonic frequency
- Measurement inputs tuned to respond to subharmonic frequency

63

Subharmonic Injection: 64S

- No V_0, therefore no I_0
- No current flow through neutral
- No interference with 20Hz injected signal

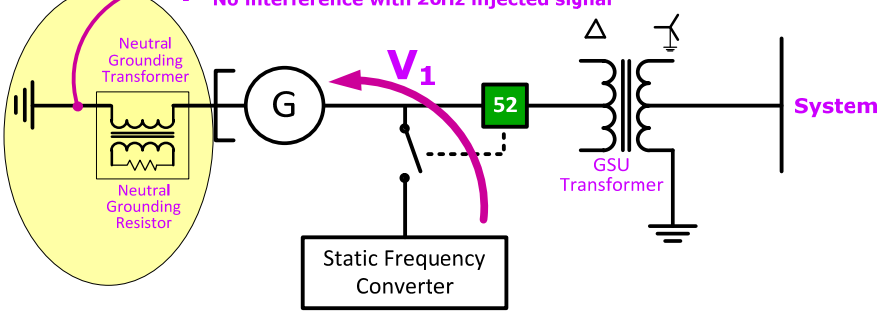

- Functions on-line and off-line
- Power and frequency independent

64

64S – Subharmonic Injection

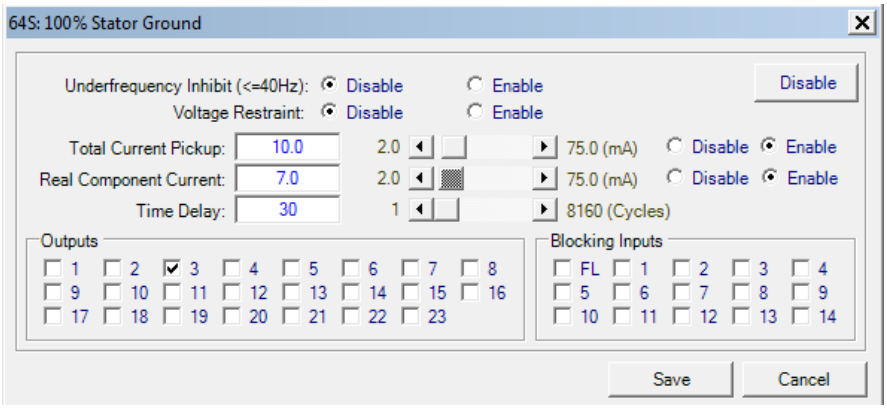

65

Stator Ground Faults: High Z Element Coverage

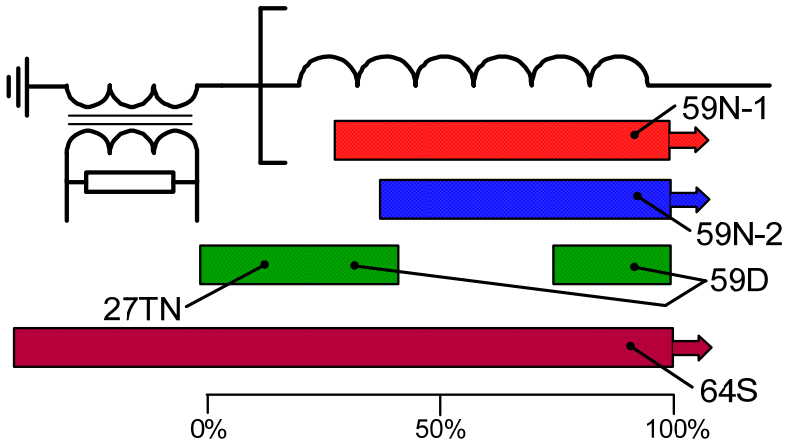

66

Stator Ground Fault: High Z Grounded Machines

- 95% stator ground fault provided by 59N
  Tuned to the fundamental frequency
  - Must work properly from 10 to 80 Hz to provide protection during startup
- Additional coverage near neutral (last 5%) provided by:
  - 27TN: 3rd harmonic undervoltage
  - 59D: Ratio of 3rd harmonic at terminal and neutral ends of winding
- Full 100% stator coverage by 64S
  - Use of sub-harmonic injection
  - May be used when generator is off-line
  - Immune to changes in loading (MW, MVAR)

67

Stator Ground Fault: Low Z Grounded Machines

- 51N element typically applied
  - Coordinate with system ground fault protection for security and selectivity
  - Results in long clearing time for internal machine ground fault
  - Selectivity issues with bused machines

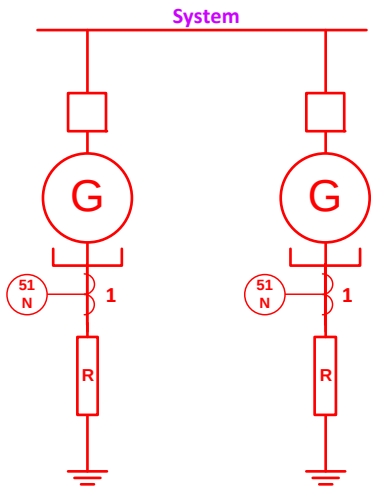

68

51N: Neutral Overcurrent

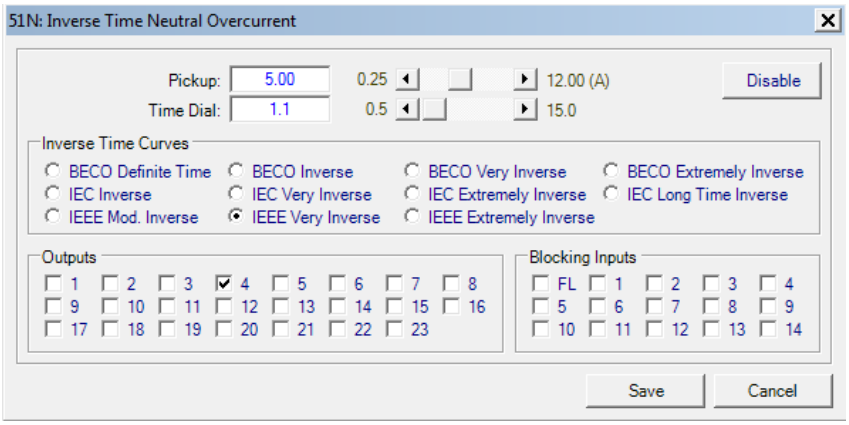

69

Directional Neutral Overcurrent: 67N
Low-Z Grounded Generator

- 67N element provides selectivity on multiple bused machine applications
- Requires only phase CTs, or terminal side zero-sequence CT
- 67N directionalized to trip for zero-sequence (ground) current toward a generator
- 67N is set faster than 51N
  - May be short definite time delay
  - Ground current should not flow into a generator under normal operating conditions
- May be applied on ungrounded machines for ground fault protection if bus or other generators are a ground source

70

Directional Neutral Overcurrent: 67N
Low-Z Grounded Generator

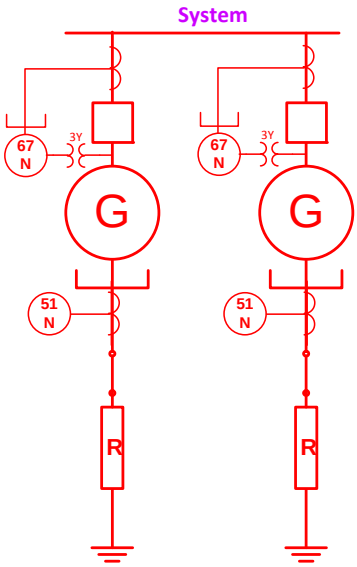

- Employ 67N to selectively clear machine ground fault for multi-generator bus connected arrangements
- Use with 51N on grounded machine(s) for internal fault and system back up
- Ground switches on all machines can all be closed

71

Directional Neutral Overcurrent: 67N
Low-Z Grounded Generator

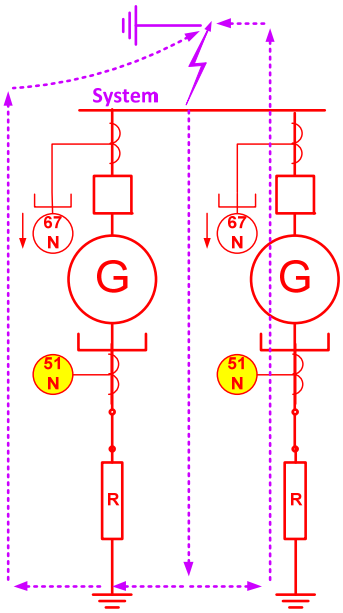

- Ground fault on system is detected by grounded generator's 51N element
- Coordinated with system relays, they should trip before 51N
- 67N sees fault current in the reverse direction and does not trip

72

Directional Neutral Overcurrent: 67N
Low-Z Grounded Generator

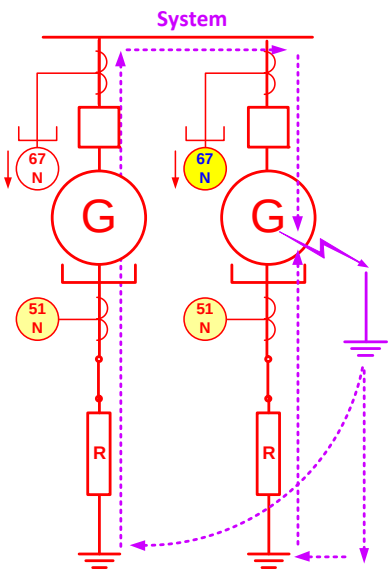

- Ground fault in machine is detected by 67N & 51N
- 67N picks up in faulted machine
- 51N picks up in faulted and unfaulted machines
- 67N trips fast in faulted machine
- 51N resets on faulted and unfaulted machines

73

Directional Neutral Overcurrent: 67N
Internal Fault

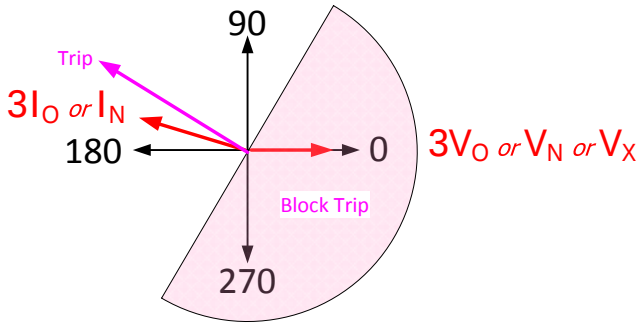

- Internal faults create angles of $3I_0$ or I_N current flow into generator from system that are approximately 150 degrees from $3V_0$
- This is from reactive power being drawn in from system as well as real power

74

67N: Directional Neutral Overcurrent

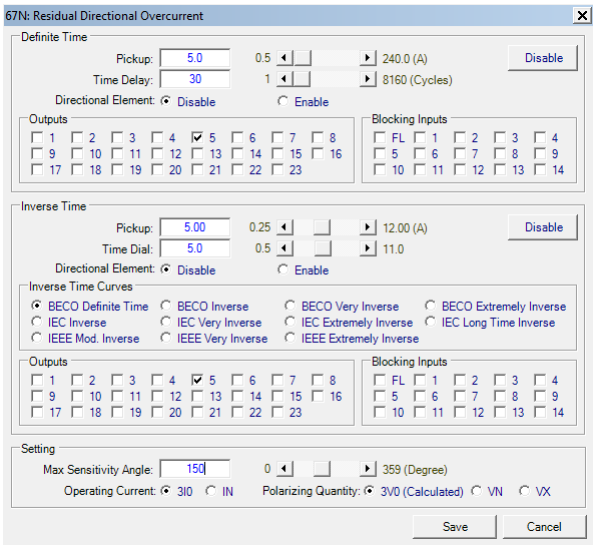

75

Directional Neutral Overcurrent: 87G
Low-Z Grounded Generator

- 87GD element provides selectivity on multiple bused machine applications
- Requires phase CTs, or terminal side zero-sequence CT, and a ground CT
- 87GD uses currents with directionalization for security and selectivity
- 87GD is set faster than 51N
  - May use short definite time delay
- Ground current should not flow into a generator from terminal end under normal operating conditions
- Ground current should not flow unchallenged into machine

76

Trip Characteristic – 87GD
Internal Fault

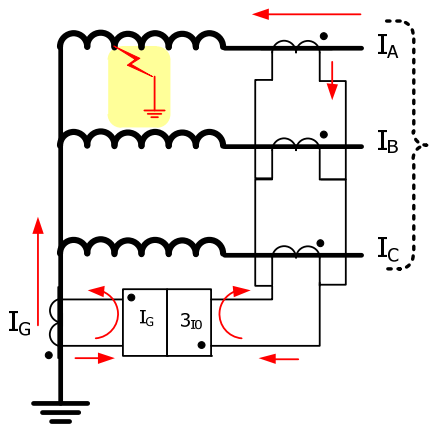

- Residual current ($3I_0$) calculated from individual phase currents
- Paralleled CTs shown to illustrate principle

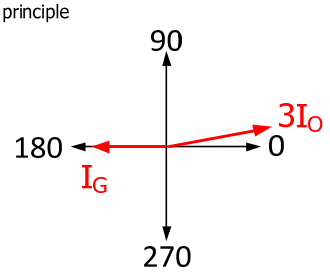

$-3I_o \times I_G \cos(0) = -3I_oI_G$

77

Trip Characteristic – 87GD
External Fault

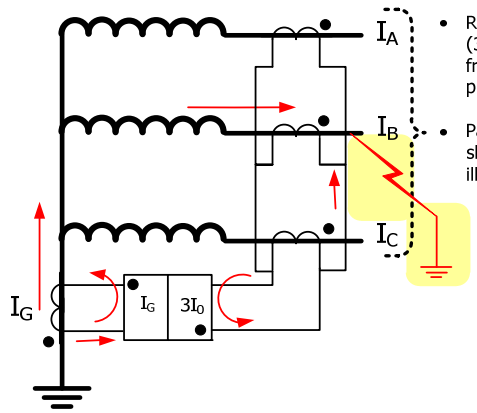

- Residual current ($3I_0$) calculated from individual phase currents
- Paralleled CTs shown to illustrate principle

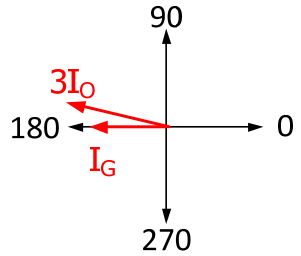

$-3I_o \times I_G \cos(0) = -3I_oI_G$

78

Trip Characteristic – 87GD
Open Breaker, Internal Fault

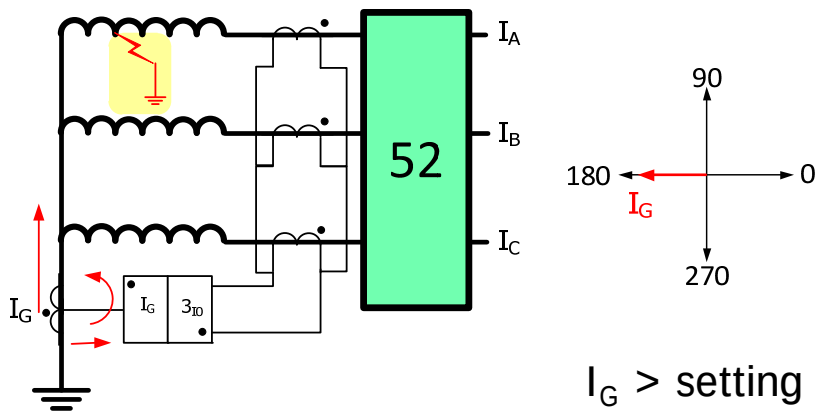

I_G > setting

79

Improved Ground Fault Sensitivity (87GD)

- Direction calculation used with currents over 140mA on both sets of CTs (3_{I0} and I_G)
- Directional element used to improve security for heavy external phase to phase faults that cause saturation
- When current >140mA, element uses current setting *and* directional signal
- When current <= 140mA, element uses current setting only
  - Saturation will not occur at such low current levels
  - Directional signal not required for security
  - Allows element to function for internal faults without phase output current (open breaker, internal fault source by generator only)

80

Directional Neutral Overcurrent: 87G
Low-Z Grounded Generator

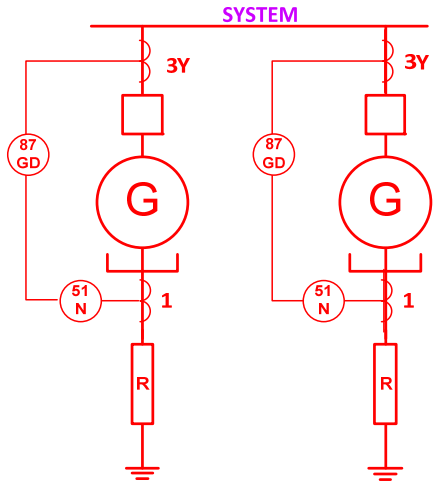

- Employed 87GD to selectively clear machine ground fault for multi-generator bus connected arrangements
- Use with 51N on grounded machine(s) for internal fault and system back up
- Ground switches on all machines can all be closed

81

Directional Neutral Overcurrent: 87G
Low-Z Grounded Generator

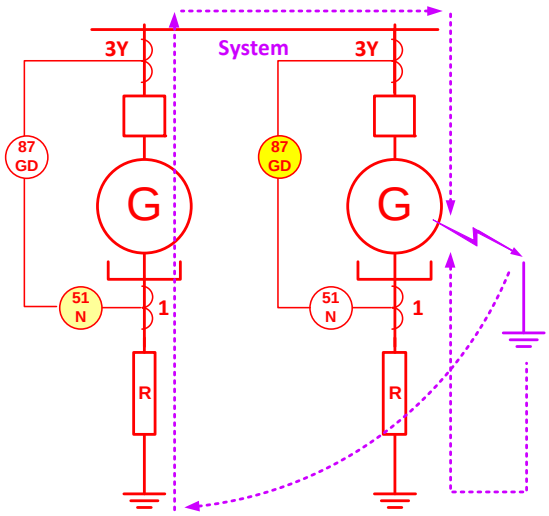

- Ground fault in machine is detected by 87GD & 51N
- 51N picks up in unfaulted machine
- 87GD trips fast in faulted machine
- 51N resets on unfaulted machine

82

Stator Ground Faults: Low Z Element Coverage

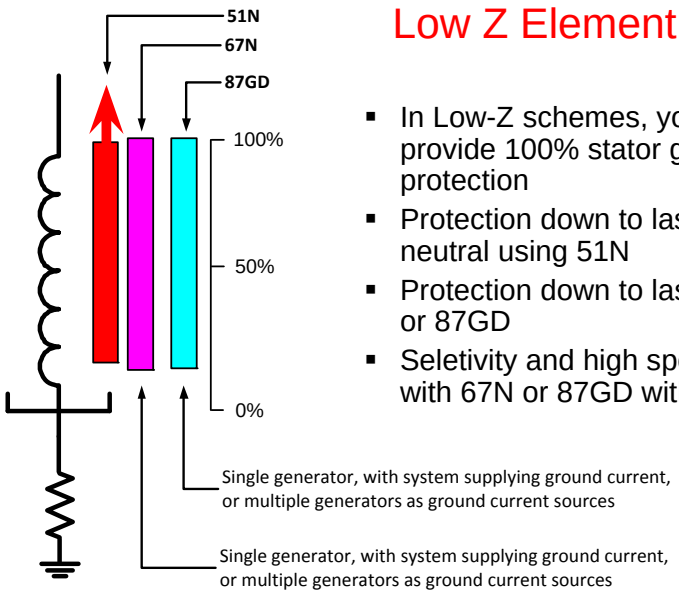

- In Low-Z schemes, you cannot provide 100% stator ground fault protection
- Protection down to last 5%-10% near neutral using 51N
- Protection down to last 5% using 67N or 87GD
- Seletivity and high speed possible with 67N or 87GD with in zone fault

83

Field/Rotor Ground Fault

- Traditional field/rotor circuit ground fault protection schemes employ DC voltage detection
  - Schemes based on DC principles are subject to security issues during field forcing, other sudden shifts in field current and system transients

84

Brushed and “Brushless” Excitation

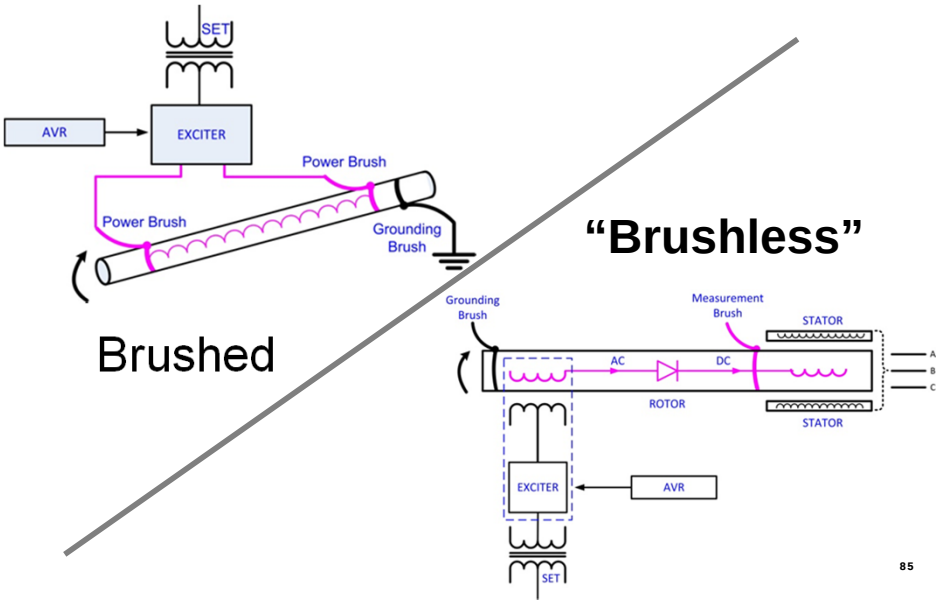

85

Field/Rotor Ground Fault (64F)

- To mitigate the security issues of traditional DC-based rotor ground fault protection schemes, AC injection based protection may be used
  - AC injection-based protection ignores the effects of sudden DC current changes in the field/rotor circuits and attendant DC scheme security issues

86

DC-Based 64F

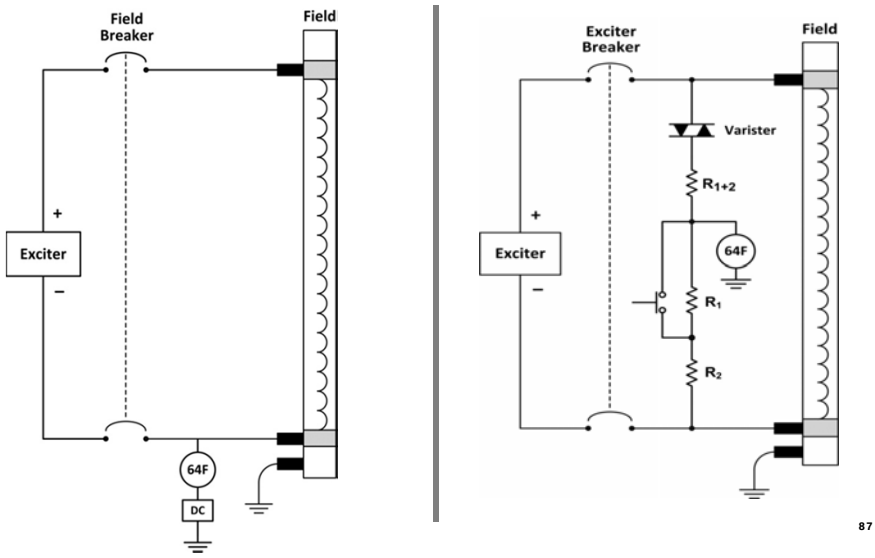

87

Advanced AC Injection Method

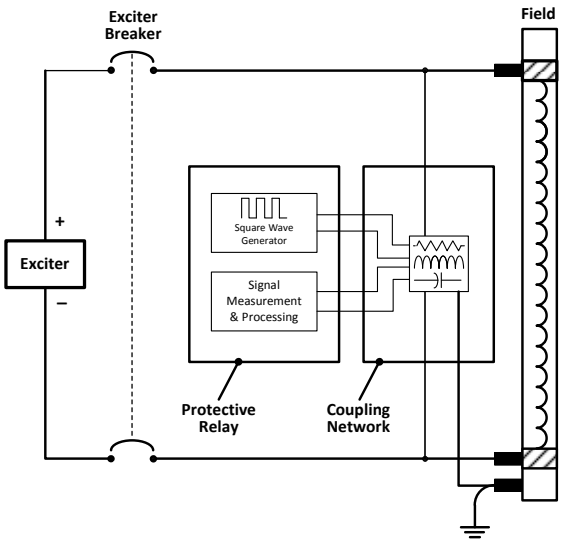

88

Advanced AC Injection Method: Advantages

- Scheme is secure against the effects of DC transients in the field/rotor circuit
  - DC systems are prone to false alarms and false trips, so they sometimes are ignored or rendered inoperative, placing the generator at risk
  - The AC system offers greater security so this important protection is not ignored or rendered inoperative
- Scheme can detect a rise in impedance which is characteristic of grounding brush lift-off
  - In brushless systems, the measurement brush may be periodically connected for short time intervals
  - The brush lift-off function must be blocked during the time interval the measurement brush is disconnected

89

Rotor Ground Fault Measurement

- Plan a shutdown to determine why impedance is lowering, versus an eventual unplanned trip!
- When resistive fault develops, **V_f goes down**

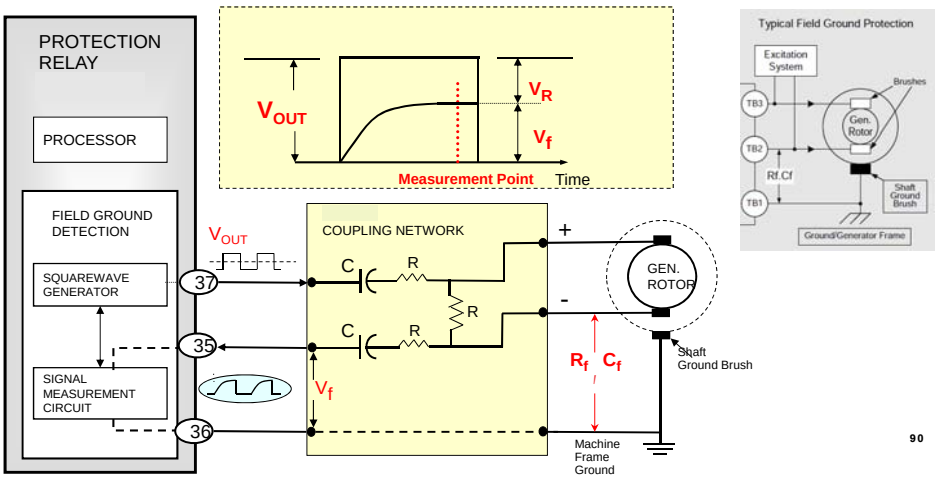

90

Brush Lift-Off Measurement

- When brush lifts off, **V_f goes up**

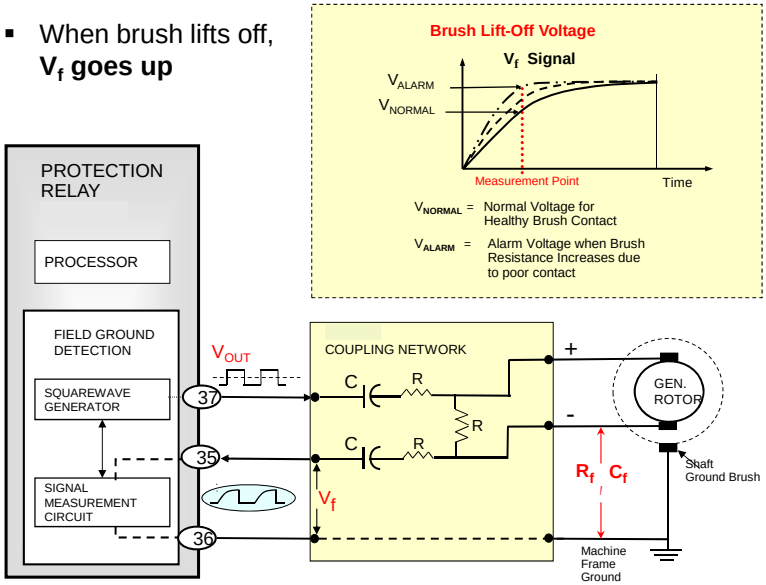

91

64F: Field/Rotor Ground Faults

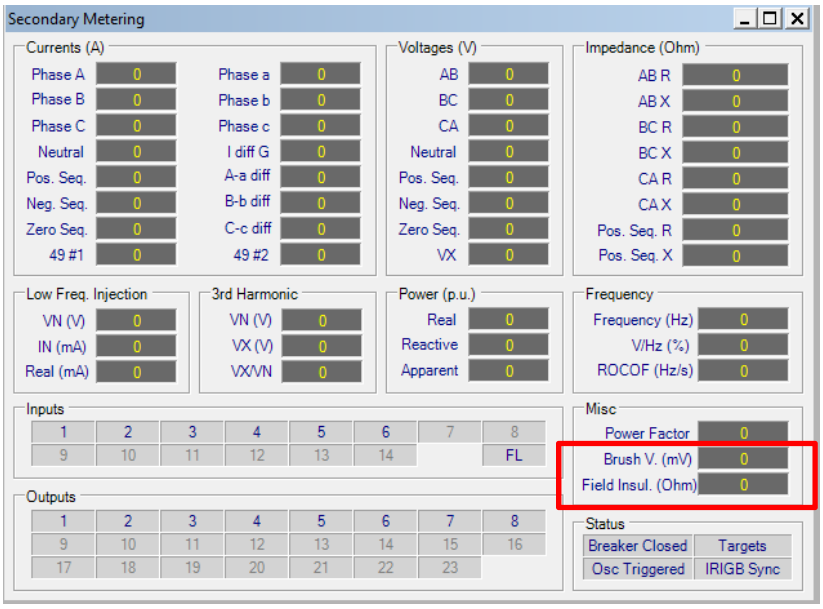

92

64F: Field/Rotor Ground Faults
64B: Brush Lift Off

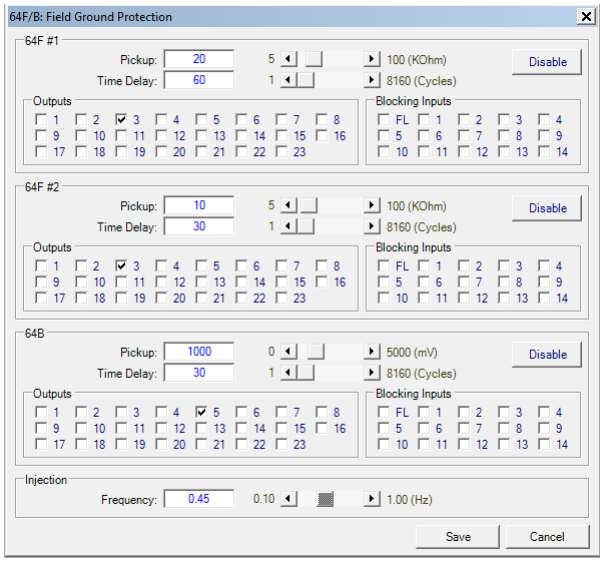

93

Stator Phase Faults

- 87G – Phase Differential (primary for in-zone faults)
  - What goes into zone must come out
  - Challenges to Differential
    - CT replication issues: Remenant flux causing saturation
    - DC offset desensitization for energizing transformers and large load pick up
    - Must work properly from 10 Hz to 80Hz so it operates correctly at off-nominal frequencies from internal faults during startup
    - May require multiple elements for CGT static start
  - Tactics:
    - Use variable percentage slope
    - Operate over wide frequency range
    - Uses I_{RMS}/I_{FUND} to adaptively desensitize element when challenged by large DC offset and harmonics for security
      - DC offset can occur from black starting and close-in faults

94

Through Current: Perfect Replication

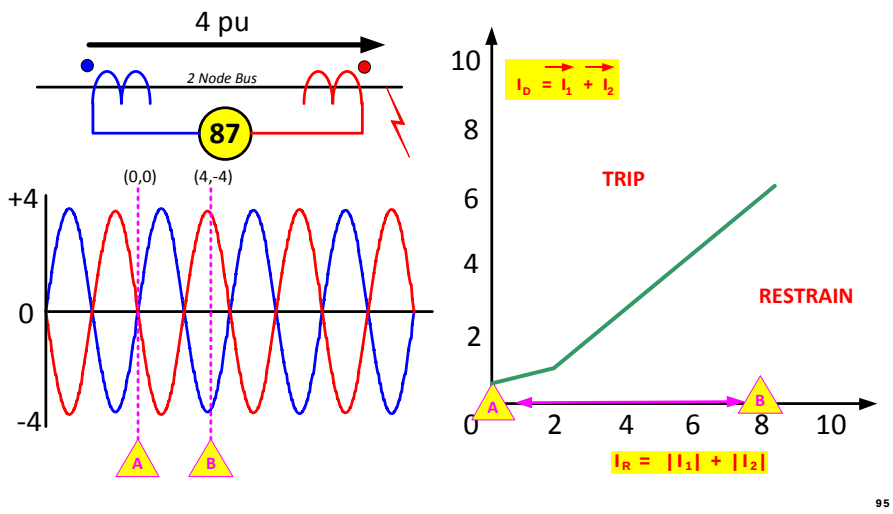

95

Through Current: Imperfect Replication

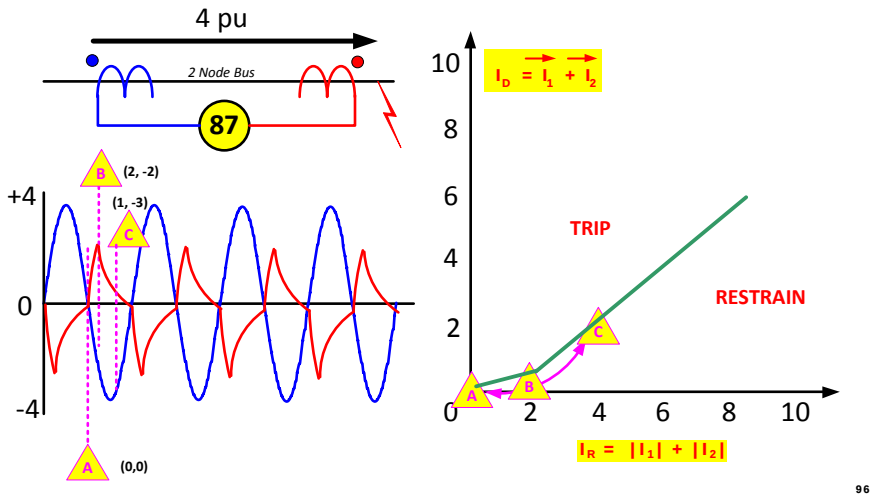

96

Internal Fault: Perfect Replication

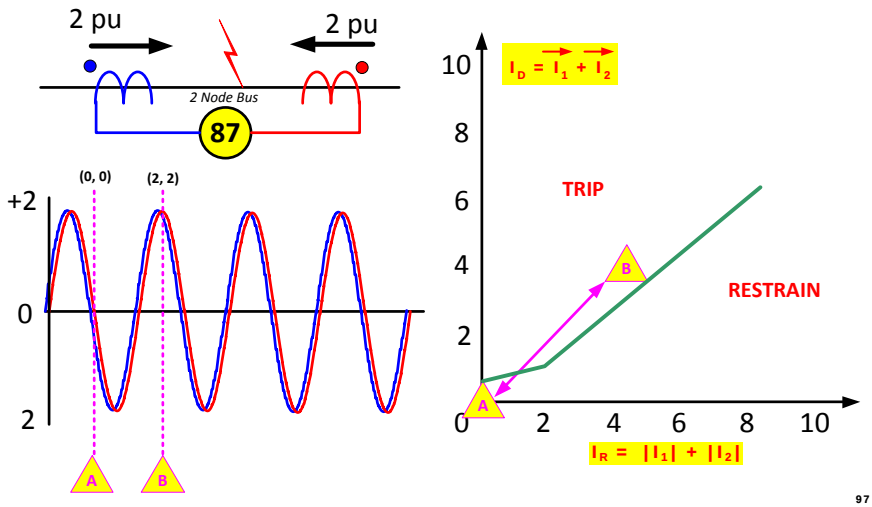

97

Internal Fault: Imperfect Replication

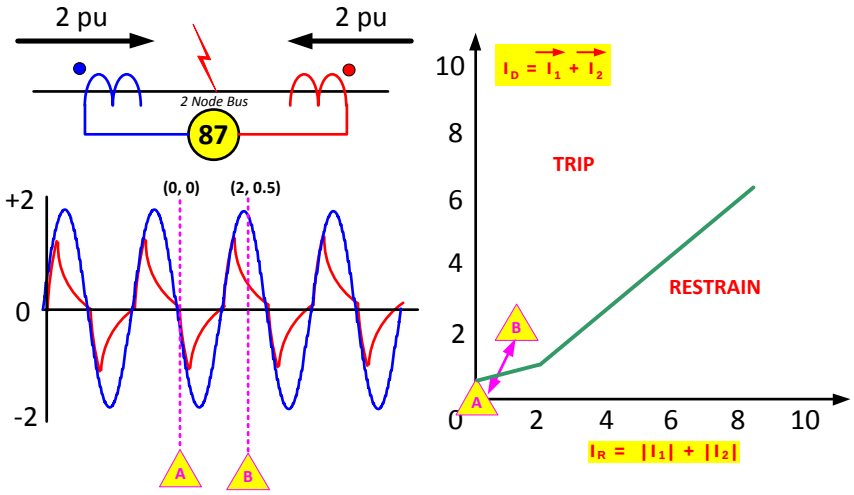

98

87 Characteristic

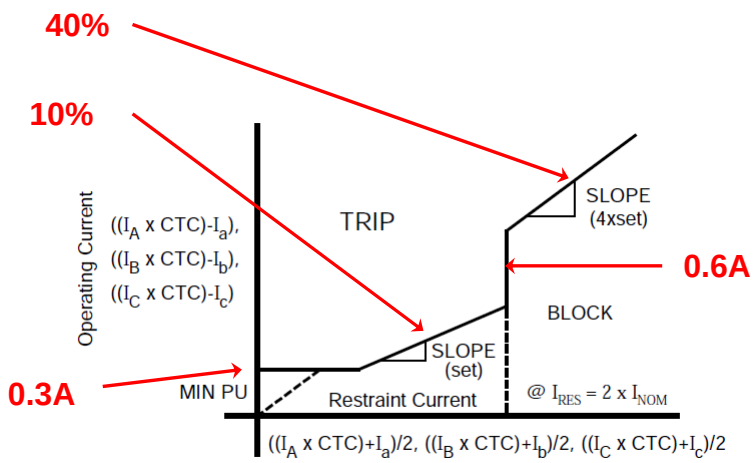

CTC = CT Correction Ratio = Line CTR/Neutral CTR
Used when Line and Neutral CTs have different ratios

99

87 Setting

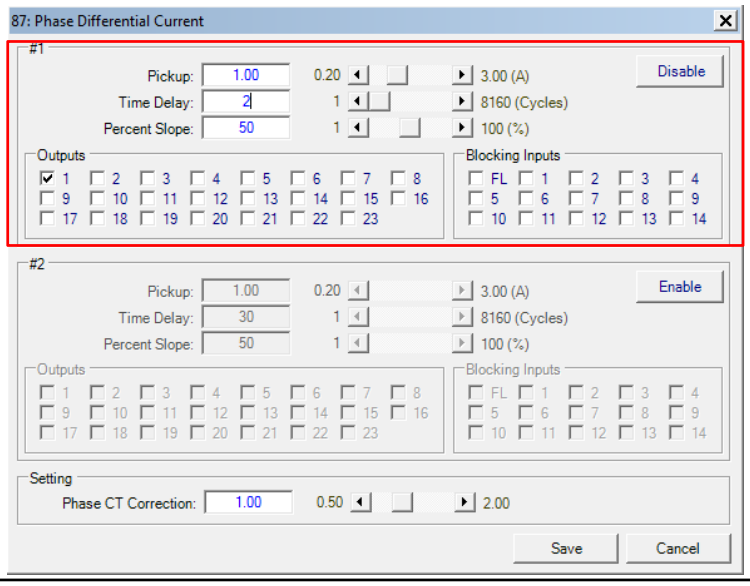

100

46: Negative Sequence Current

- **Typically caused by open circuits in system**

  -Downed conductors
  -Stuck poles switches and breakers

- **Unbalanced phase currents create negative sequence current in generator stator and induces a double frequency current in the rotor**

- **Induced current (120 Hz) into rotor causes surface heating of the rotor**

101

Rotor End Winding Construction

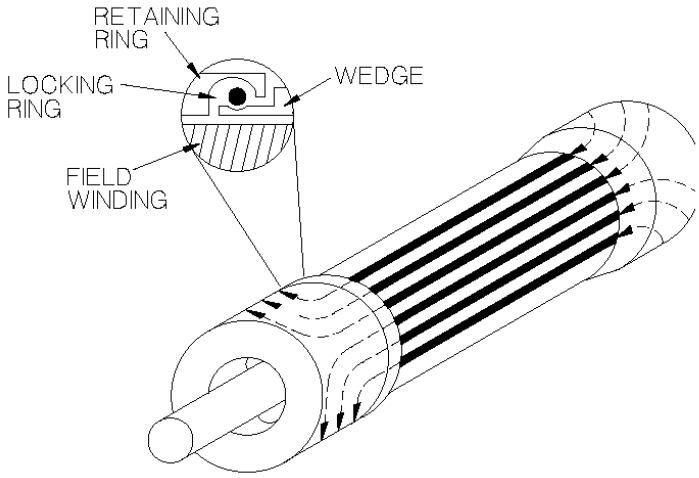

102

Currents Flow in the Rotor Surface

Negative Sequence Current:
Constant Withstand Generator Limits

- **Salient Pole**
  - With connected amortisseur 10%
  - With non-connected amortisseur 5%
- **Cylindrical**
  - Indirectly 10%
  - Directly cooled - to 960 MVA 8%
    - 961 to 1200 MVA 6%
    - 1200 to 1500 MVA 5%

103

Negative Sequence Current: Constant Withstand Generator Limits

- **Nameplate**
  - Negative Sequence Current (I2) Constant Withstand Rating
  - "K" Factor

$$I_2^2 T = K$$

where **K = Manufacturer Factor (the larger the generator the smaller the K value)**

104

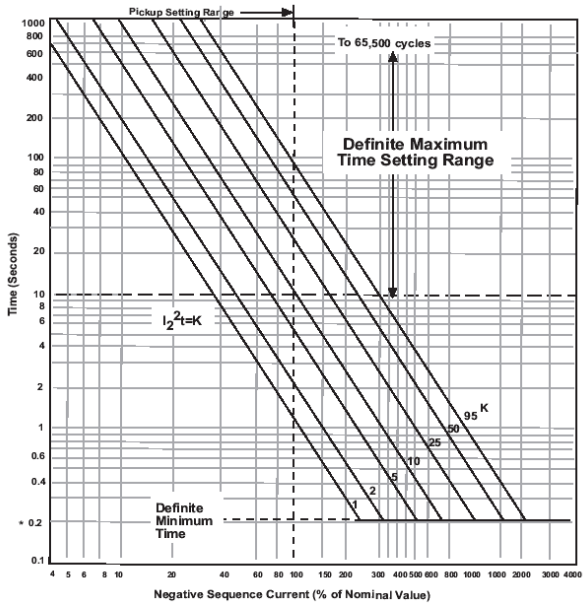

Generator Ratings

Typical
K Values
Salient Pole Generators
40
Synchronous Generators
30

105

46: Negative Sequence Electromechanical Relays

- Sensitivity restricted and cannot detect I_2 levels less than 60% of generator rating
- Fault backup provided
- Generally insensitive to load unbalances or open conductors

106

46: Negative Sequence Digital Relay

- Protects generator down to its continuous negative sequence current (I_2) rating vs. electromechanical relays that don't detect levels less than 60%
- Fault backup provided
- Can detect load unbalances
- Can detect open conductor conditions

107

Overexcitation (24)

- Measured
  - High Volts/Hertz ratio
  - Normal = 120V/60Hz = 1pu
  - Voltage up, and/or frequency low, make event
- Issues
  - Overfluxing of metal causes localized heating
  - Heat destroys insulation
  - Affects generators and transformers

108

Overexcitation (24)

Causes of V/HZ Problems

- Generator voltage regulator problems
  - Operating error during off-line manual regulator operation
  - Control failure
  - VT fuse loss in voltage regulator (AVR) sensing voltage
- System problems
  - Unit load rejection: full load, partial rejection
  - Power system islanding during major disturbances
  - Ferranti effect
  - Reactor out
  - Capacitors in
  - Runaway LTCs

109

Overexcitation (24)

Protects machine against excessive V/Hz (overfluxing)

Legacy Protection

- Typically "stair-step" two definite time setpoints
- Two definite time elements
  - One may be used to alarm
  - One may be used for high set fast trip
- Either overprotects or underprotects
- Instantaneous Reset

110

Legacy Approach

Dual-Level, Definite-Time V/Hz Protection

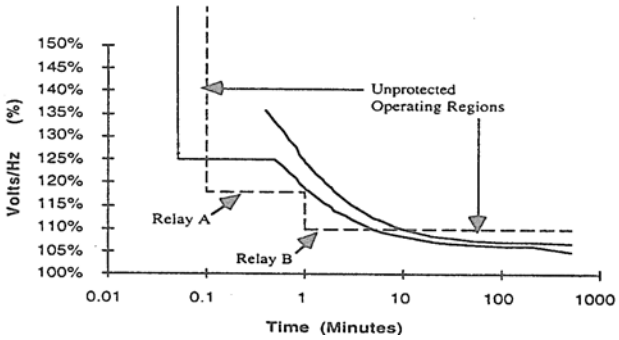

Attempts to approximate curves with stairsteps

111

Overexcitation (24)

<u>Modern Protection</u>

- Definite time elements
  - Curve modify
  - Alarm
- Inverse curves
  - Select curve type for best coordination to manufacturers recommendations
  - Employ settable "integrating" reset
    - Provides "thermal memory" for repeat events

112

Overexcitation (24)

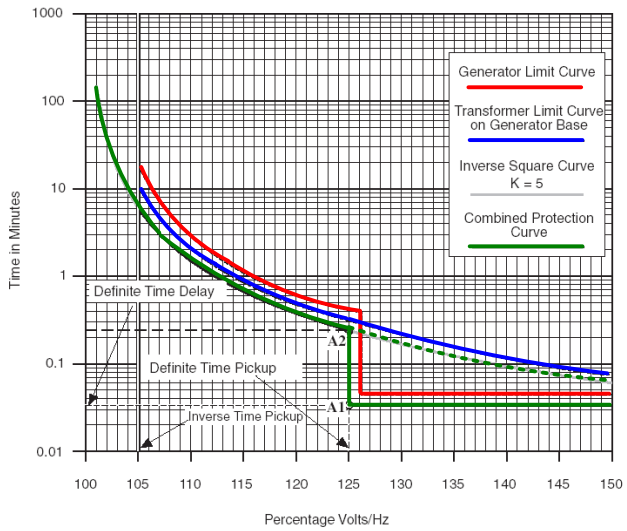

Example plot using definite time and inverse curve

113

Overexcitation (24)

Modern Protection

- **V/Hz measurement operational range: 2-80 Hz**

- Necessary to avoid damage to steam turbine generators during rotor pre-warming at startup
- Necessary to avoid damage to converter-start gas turbine generators at startup
- In both instances, the generator frequency during startup and shut down can be as low as 2 Hz

NOTE: An Overvoltage (59) function, designed to work properly up to 120 Hz, is important for Hydro Generators where the generators can experience high speed (high frequency) during full load rejection.

Since the V/Hz during this condition is low, the 24 function will not operate, and the 59 function will provide proper protection from overvoltage.

114

40: Loss of Field

Can adversely effect the generator and the system!!

- **Generator effects**
  - Synchronous generator becomes induction
  - Slip induced eddy currents heat rotor surface
  - High reactive current drawn by generator overloads stator
- **Power system effects**
  - Loss of reactive support
  - Creates a reactive drain
  - Can trigger system/area voltage collapse

115

Typical Generator Capability Curve

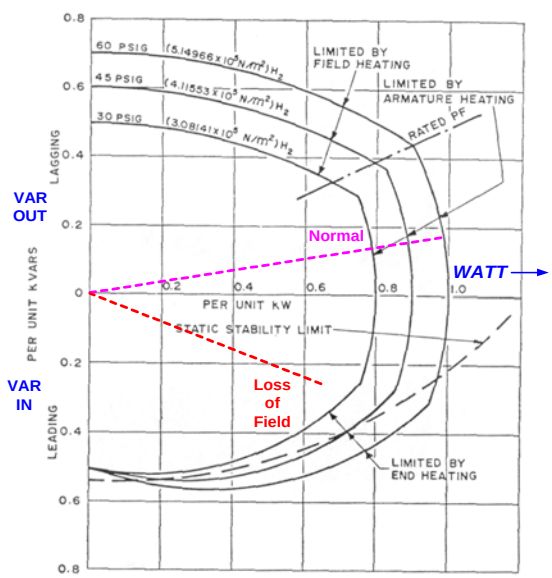

Generator capability curve viewed on the P-Q plane.
This info must be converted to the R-X plane.

116

Generator Capability Curve

- Limiting factors are rotor and stator thermal limits
- Underexcited limiting factor is stator end iron heat
- Excitation control setting control is coordinated with steady-state stability limit (SSSL)
- Minimum excitation limiter (MEL) prevents exciter from reducing the field below SSSL

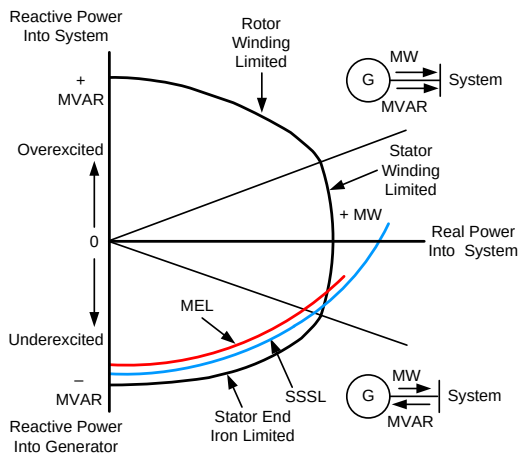

117

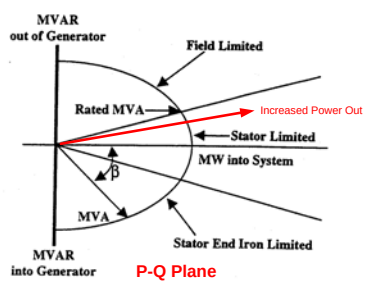

P-Q Plane

TRANSFORMATION FROM MW-MVAR TO R-X PLOT

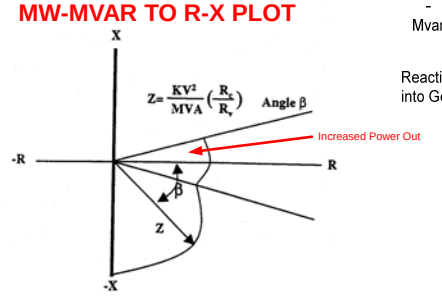

R-X Plane

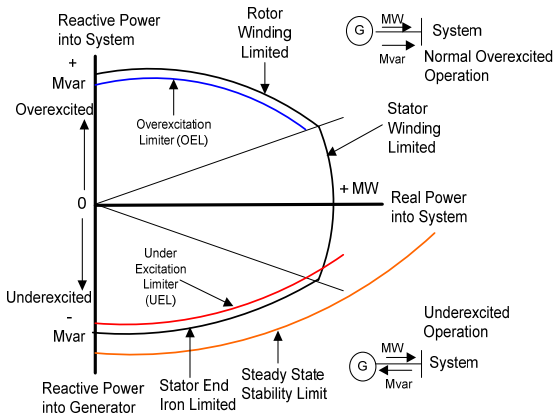

TYPICAL GENERATOR CAPABILITY CURVE Excitation Limiters and Steady State Stability

118

Loss of Field
GE and Westinghouse Methods

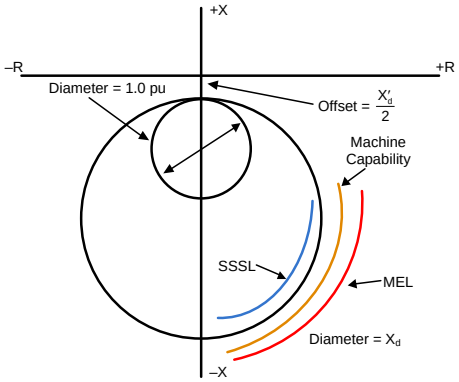

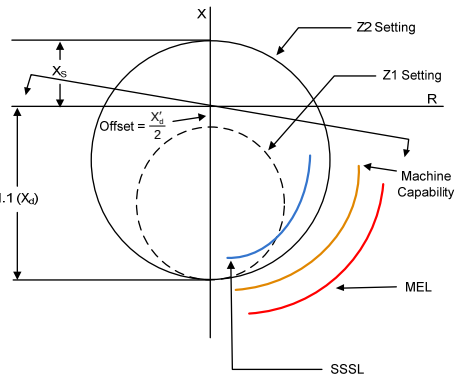

Two Zone Offset Mho
GE
CEH

Impedance w/Directional Unit
Westinghouse
KLF

119

Loss of Field
Two Zone Offset Mho

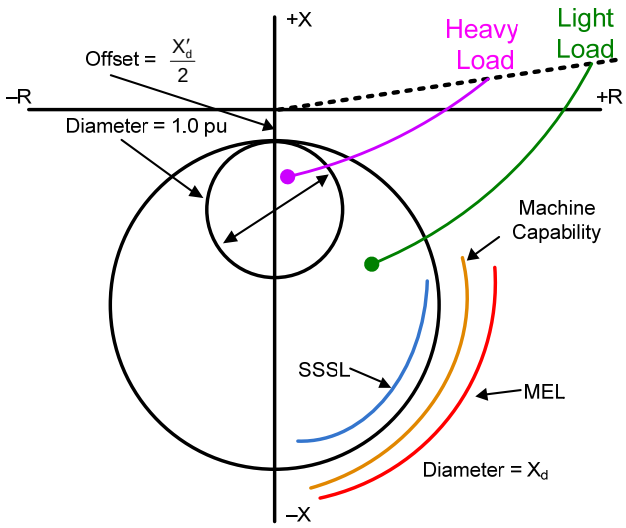

120

Loss of Field
Impedance w/Direction Unit

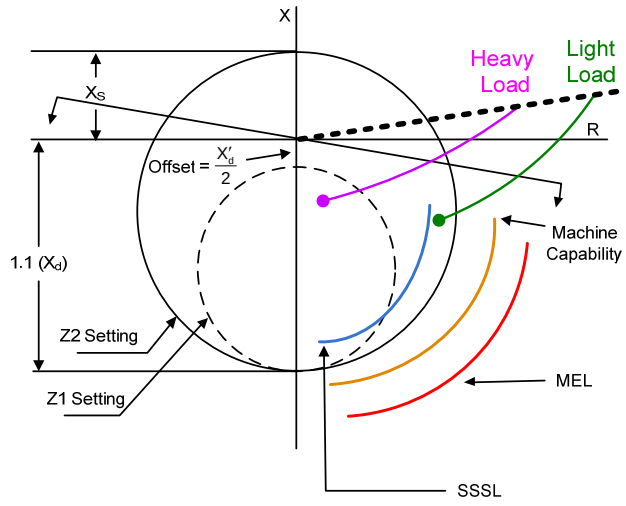

121

40: Multiple Mho Implementations
May Provide Better Fit Reactive Capability Curves

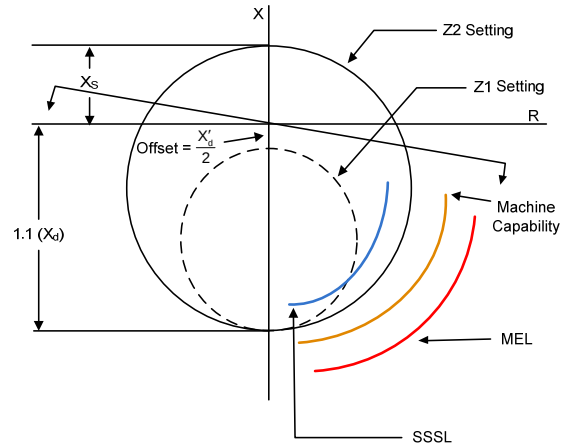

Two Zone Offset Mho Impedance w/Directional Unit

Better ability to match capability curves after conversion from P-Q to R-X plane

122

40: Loss of Field

- **Positive sequence quantities used to maintain security and accuracy over a wide frequency range.**
- **Must work properly from 50 to 70 Hz (60 Hz systems) Required to operate correctly (and not misoperate) with wide frequency variations possible during power swing conditions.**
- **May employ best of both methods to optimize coordination.**
  - Provide maximum coordination between machine limits, limiters and protection
  - Offset mho for Z1. Fast time for true Loss of Field event.
  - Impedance with directional unit and slower time for Z2. Better match of machine capability curve. Also able to ride through stable swing.
  - May employ voltage supervision for accelerated tripping of Z2 (slower zone) in cases of voltage collapse where machine is part of the problem, importing VArs.

123

Loss of Field Event

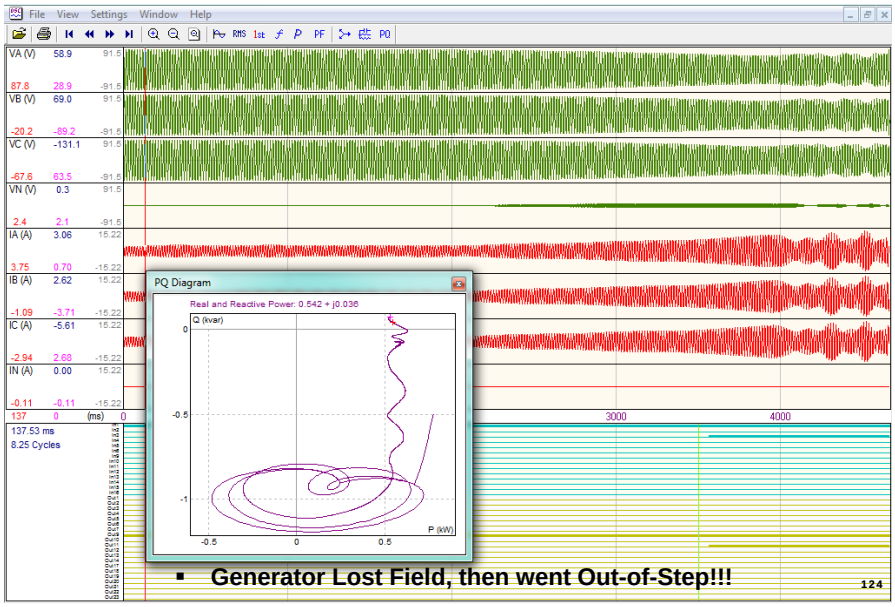

- **Generator Lost Field, then went Out-of-Step!!!**

124

40: Multiple Loss-of-Field Mho Implementations to Better Fit Reactive Capability Curves

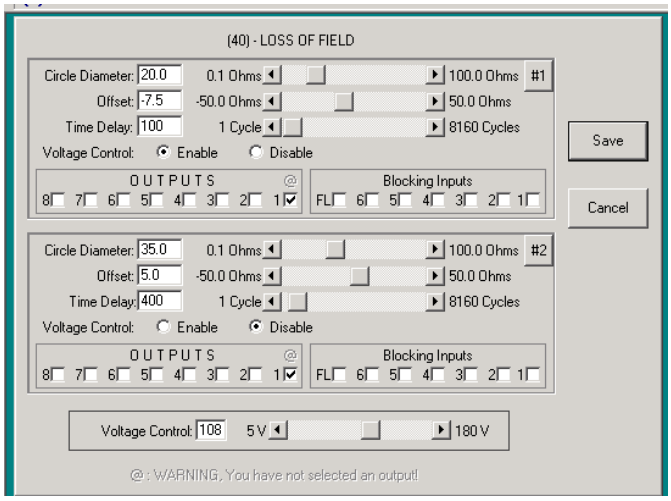

Two Zone Offset Mho Impedance w/Directional Unit

Better ability to match capability curves after conversion from P-Q to R-X plane

125

40: Multiple Loss-of-Field Mho Implementations to Better Fit Reactive Capability Curves

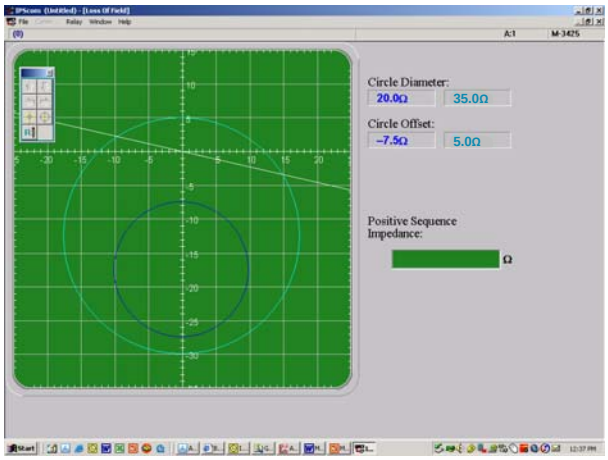

Two Zone Offset Mho Impedance w/Directional Unit

Better ability to match capability curves after conversion from P-Q to R-X plane

126

Phase Distance (21)

- **Phase distance backup protection may be prone to tripping on stable swings and load encroachment**
  - Employ three zones
    - Z1 can be set to reach 80% of impedance of GSU for 87G back-up.
    - Z2 can be set to reach 120% of GSU for station bus backup, **or** to overreach remote bus for system fault back up protection. Load encroachment blinder provides security against high loads with long reach settings.
    - Z3 may be used in conjunction with Z2 to form out-of-step blocking logic for security on power swings **or** to overreach remote bus for system fault back up protection. Load encroachment blinder provides security against high loads with long reach settings.
  - Use minimum current supervision provides security against loss of potential (machine off line)

127

21: Distance Element

With Load Encroachment Blinder fro Z1, Z2, Z3

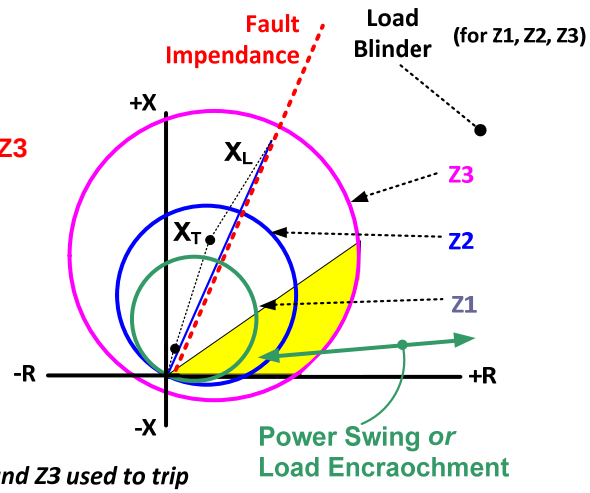

Z1, Z2 and Z3 used to trip
Z1 set to 80% of GSU, Z2 set to 120% of GSU
Z3 set to overreach remote bus

128

Stable Power Swing and Load Encroachment Blinding

3-Zone 21 Function with Load Encroachment

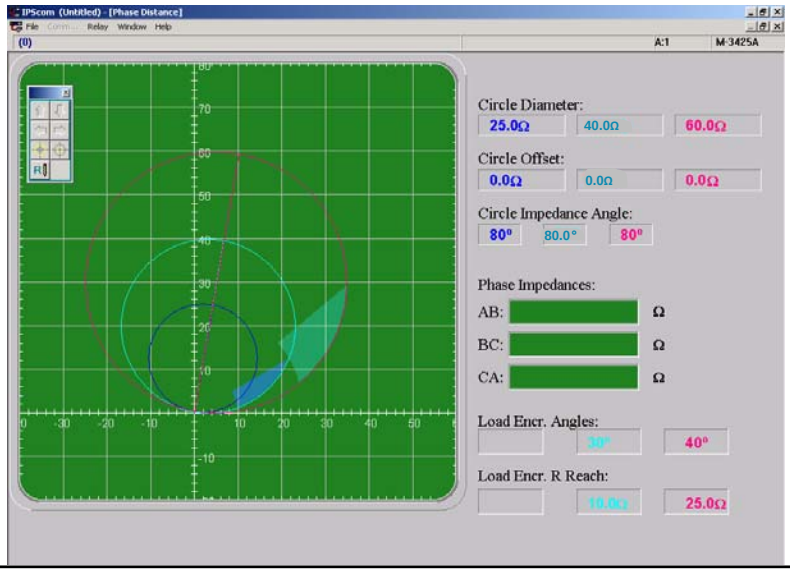

129

21: Distance Element

With Power Swing Block & Load Encroachment Blocking for Z1 and Z2

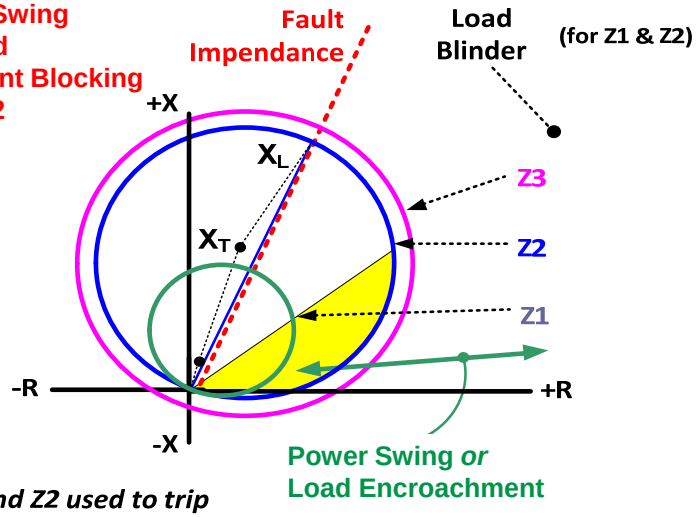

Z1 and Z2 used to trip
Z1 set to 80% of GSU, Z2 set to overreach remote bus
Z3 used for power swing blocking; Z3 blocks Z2

130

3-Zone 21 Function with OSB/Load Encroachment

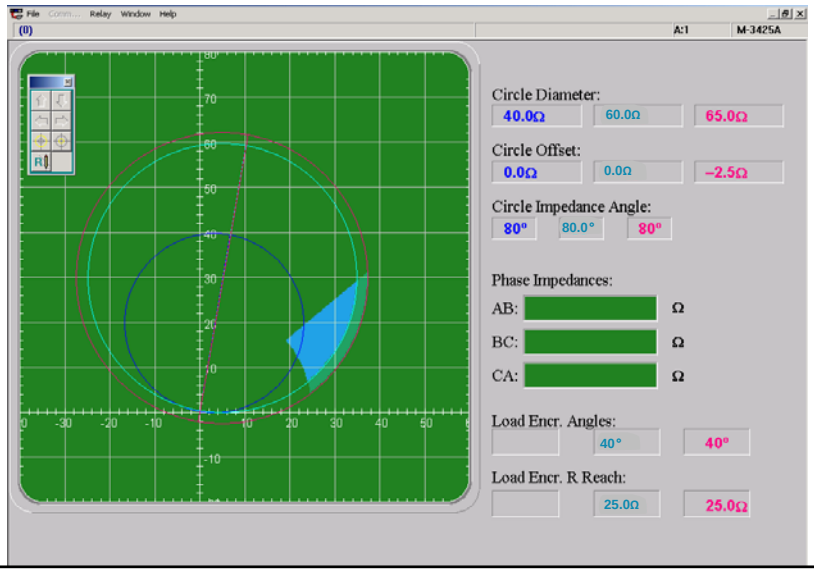

131

21 Settings

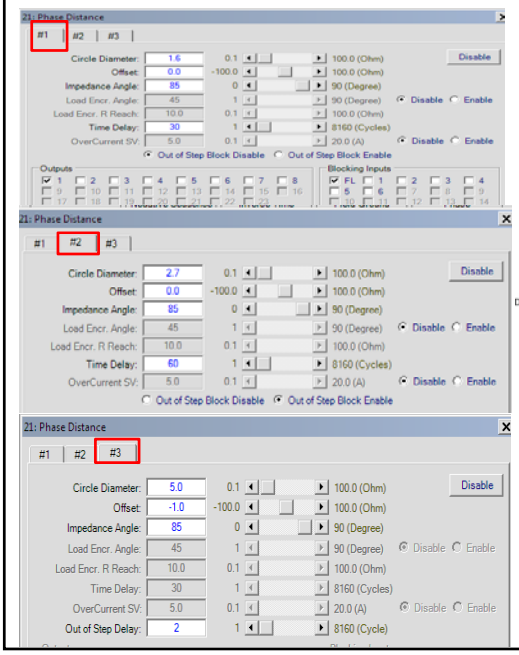

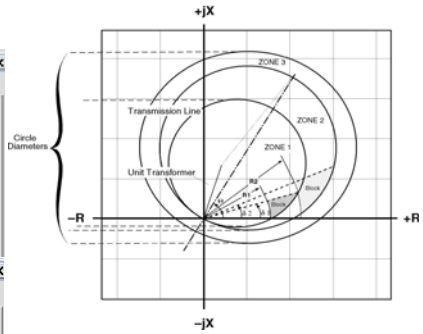

132

Generator Out-of-Step Protection (78)

- **Types of Instability**
  - Steady State: Steady Voltage and Impedance (Load Flow)
  - Transient: Fault, where voltage and impedance change rapidly
  - Dynamic: Oscillations from AVR damping (usually low f)
- **Occurs with unbalance of load and generation**
  - Short circuits that are severe and close
  - Loss of lines leaving power plant (raises impedance of loadflow path)
  - Large losses or gains of load after system break up
- **Generator accelerates or decelerates, changing the voltage angle between itself and the system**
- **Designed to cover the situation where electrical center of power system disturbance passes through the GSU or the generator itself**
- **More common with modern EHV systems where system impedance has decreased compared to generator and GSU impedance**

133

Generator Out-of-Step Protection (78)

- When a generator goes out-of-step (synchronism) with the power system, high levels of transient shaft torque are developed.
- If the pole slip frequency approaches natural shaft resonant frequency, torque produced can break the shaft
- High stator core end iron flux can overheat and short the generator stator core
- GSU subjected to high transient currents and mechanical stresses

134

Stability

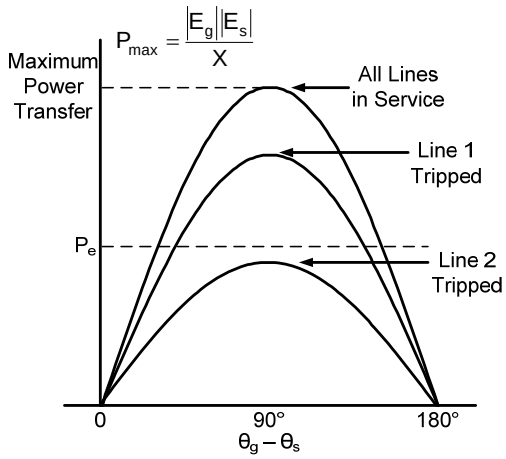

Power Transfer Equation

$$P_e = \frac{|E_g||E_s|}{X}\sin(\theta_g - \theta_s)$$

E_s - System Voltage
E_g - Generator Voltage
Θ_s - System Voltage Phase Angle
Θ_g - Generator Voltage Phase Angle
P_e - Electrical Power

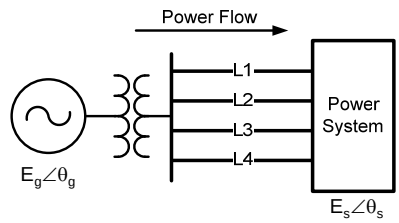

For maximum power transfer:

- Voltage of GEN and SYSTEM should be nominal – Faults lower voltage
- Impedance of lines should be low – lines out raise impedance

135

Single Blinder Scheme

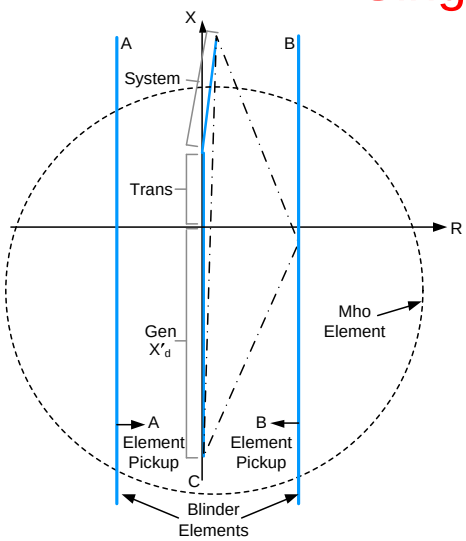

- One pair of blinders (vertical lines)
- Supervisory offset mho
- Blinders limit reach to swings near the generator

136

Graphical Method: 78

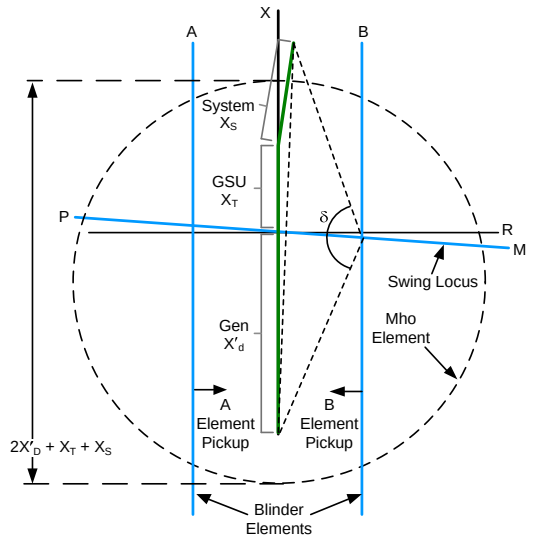

137

Graphical Method: 78

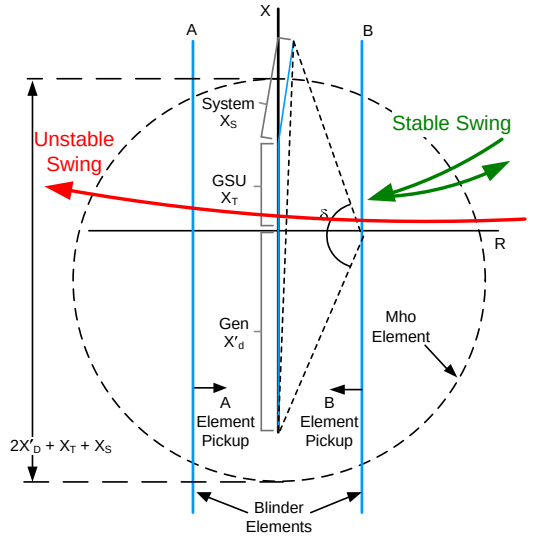

138

Out-of-Step (Loss of Synchronism) Event

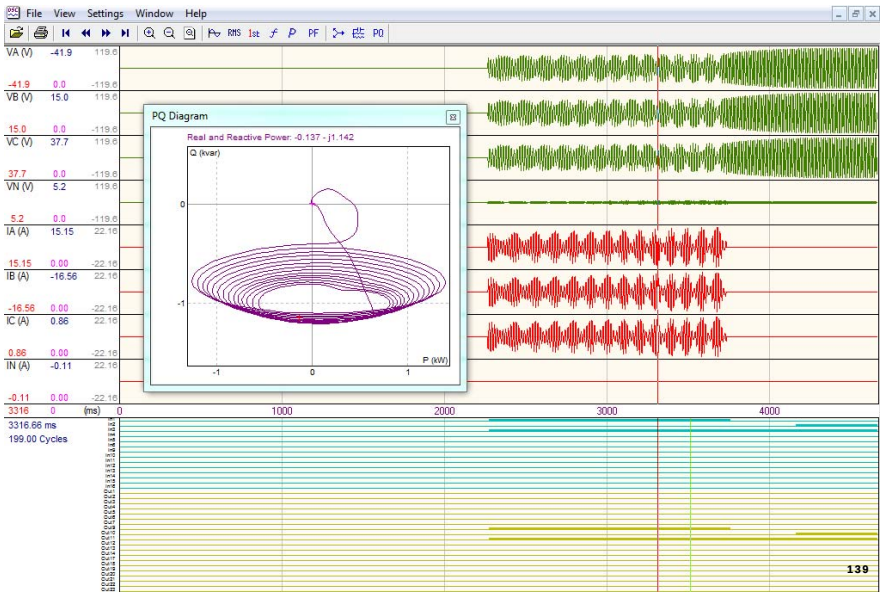

139

Generator Out-of-Step Protection (78)

<u>Dependability Concerns</u>

- Positive sequence quantities used to maintain security and accuracy over a wide frequency range.
- Required to operate correctly (and not misoperate) with wide frequency variations possible during power swing conditions
  - Must work properly from 50 to 70 Hz (60 Hz systems).

140

Generator Out-of-Step Protection (78)

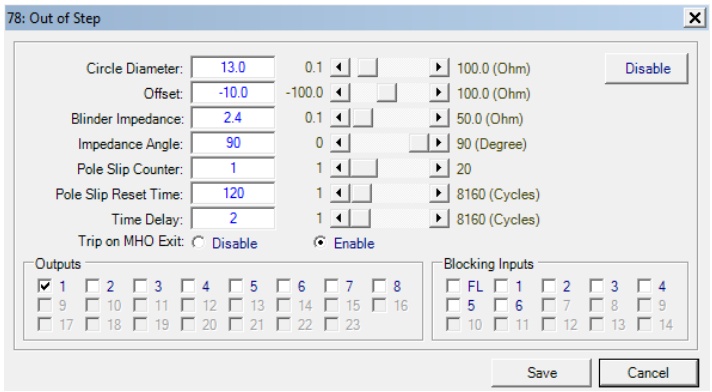

141

Generator Out-of-Step Protection (78)

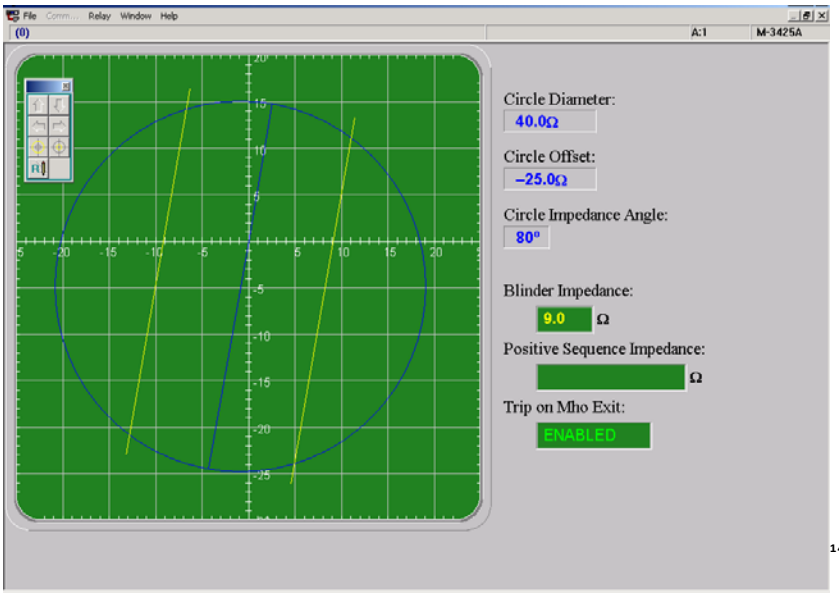

142

Off-Nominal Frequency Impacts

- Underfrequency may occur from system overloading
  - Loss of generation
  - Loss of tie lines importing power
- Underfrequency is an issue for the generator **81-U**
  - Ventilation is decreased
  - Flux density (V/Hz) increases
- Underfrequency limit is typically dictated by the generator and turbine
  - Generator: V/Hz and loading
  - Turbine: Vibration Issues

- Overfrequency may occur from load rejection
- Overfrequency is typically not an issue with the generator
  - Ventilation is improved **81-O**
  - Flux density (V/Hz) decreases
- Overfrequency limit is typically dictated by the turbine (vibration)

143

System Frequency Overview

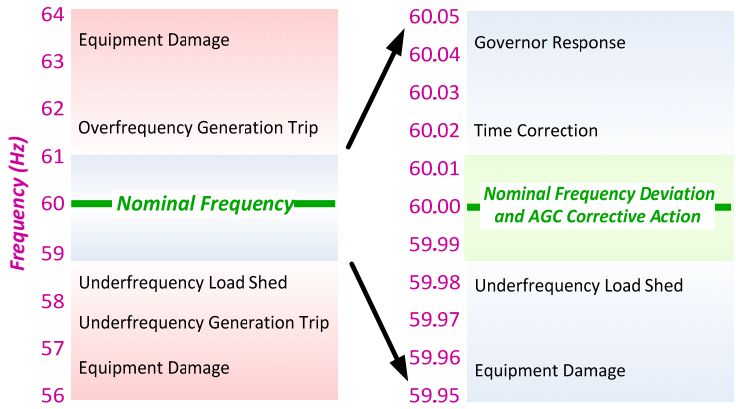

- For overfrequency events, the generator prime mover power is reduced to bring generation equal to load
- For underfrequency events, load shedding is implemented to bring load equal to generation
  - It is imperative that underfrequency tripping for a generator be coordinated with system underfrequency load shedding

144

Abnormal Operating Conditions

- **81 – Four Step Frequency**
  - Any step may be applied over- or underfrequency
  - High accuracy – 1/100th Hz (0.01 Hz)
  - Coordination with System Load Shedding
- **81A – Underfrequency Accumulator**
  - Time Accumulation in Six Underfrequency Bands
  - Limits Total Damage over Life of Machine
    - Typically used to Alarm
- **81R – Rate of Change of Frequency**
  - Allows tripping on rapid frequency swing

145

Steam Turbine Underfrequency Operating Limitations

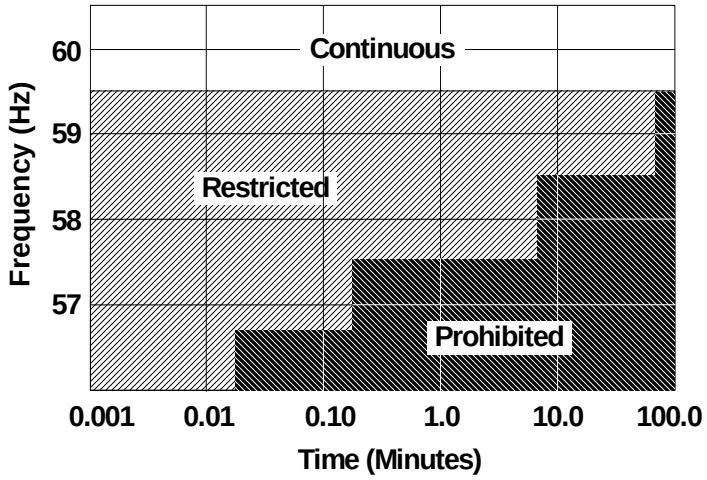

146

Typical, from C37.106

81U – Underfrequency

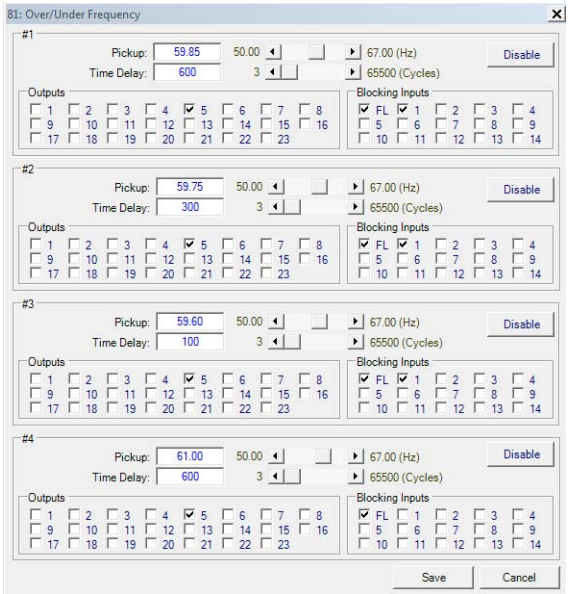

147

Turbine Over/Underfrequency

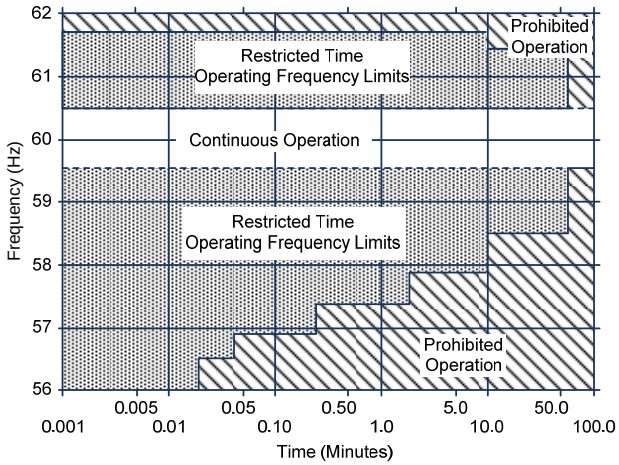

Typical, from C37.106

148

81A – Underfrequency Accumulator

- Turbine blades are designed and tuned to operate at rated frequencies
- Operating at frequencies different than rated can result in blade resonance and fatigue damage
  - In 60 Hz machines, the typical operating frequency range:
    - 18 to 25 inch blades = 58.5 to 61.5 Hz
    - 25 to 44 inch blades = 59.5 and 60.5 Hz
  - Accumulated operation, for the life of the machine, not more than:
    - 10 minutes for frequencies between 56 and 58.5 Hz
    - 60 minutes for frequencies between 58.5 and 59.5 Hz

149

81A – Underfrequency Accumulator

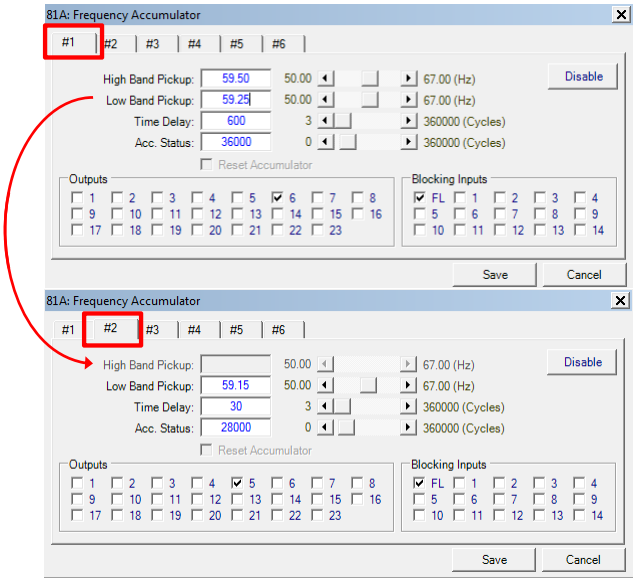

150

Anti-Motoring: 32

- Used to protect generator from motoring during loss of prime mover power
- Motoring:
  - Wastes power from the system
  - May cause heating in steam turbines as ventilation is greatly reduced
  - Steam and dewatered hydro can motor with very little power; <=1% rated
  - CGT and Recip typically use 10-25% of rated power to motor
- Generators are often taken off the system by backing off the power until importing slightly so not to trip with power export and go into overspeed (turbine issue)
  - This is known as sequential tripping
- Two 32 elements may be applied:
  - Sequential trip (self reset, no lockout)
  - Abnormal trip (lockout)
  - Need great sensitivity, down to .002pu
  - Usually applied as 32R, may be applied as 32F-U

151

Directional Power (32F/R)

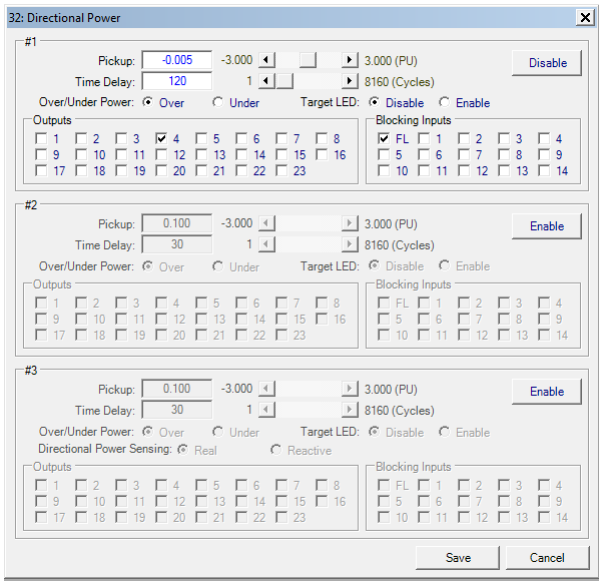

152

Causes of Inadvertent Energizing

- Operating errors
- Breaker head flashovers
- Control circuit malfunctions
- Combination of above

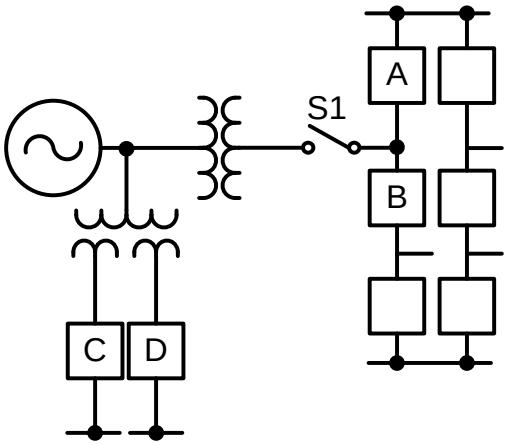

153

Inadvertent Energizing: Protection Response

- Typically, normal generator relaying is not adequate to detect inadvertent energizing
  - Too slow or not sensitive enough
    - Distance
    - Negative sequence
    - Reverse power
    - Some types are complicated and may have reliability issues
      - Ex., Distance relays in switchyard disabled for testing and inadvertent energizing event takes place

154

Inadvertent Energizing

- When inadvertently energized from 3-phase source, the machine acts like an induction motor
  - Rotor heats rapidly (very high I_2 in the rotor)
- Current drawn
  - Strong system: 3-4x rated
  - Weak system: 1-2x rated
  - From Auxiliary System: 0.1-0.2x rated

- When inadvertently energized from 1-phase source (pole flashover), the machine does not accelerate
  - No rotating flux is developed
  - Rotor heats rapidly (very high I_2 in the rotor)

- Protection system must be able to detect and clear both 3-phase and 1-phase inadvertent energizing events

155

Inadvertent Energizing Scheme

- Undervoltage (27) supervises low-set, instant overcurrent (50) – recommended 27 setting is 50% or lower of normal voltage
- Pickup timer ensures generator is dead for fixed time to ride through three-phase system faults
- Dropout timer ensures that overcurrent element gets a chance to trip just after synchronizing

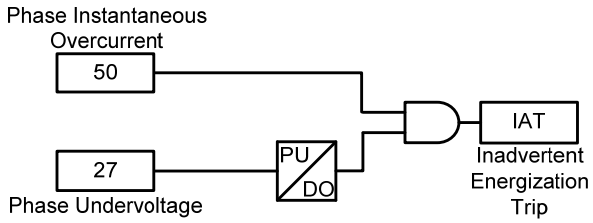

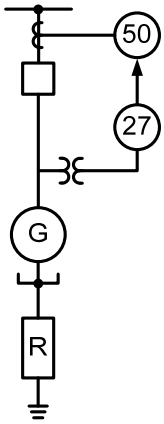

156

Inadvertent Energizing

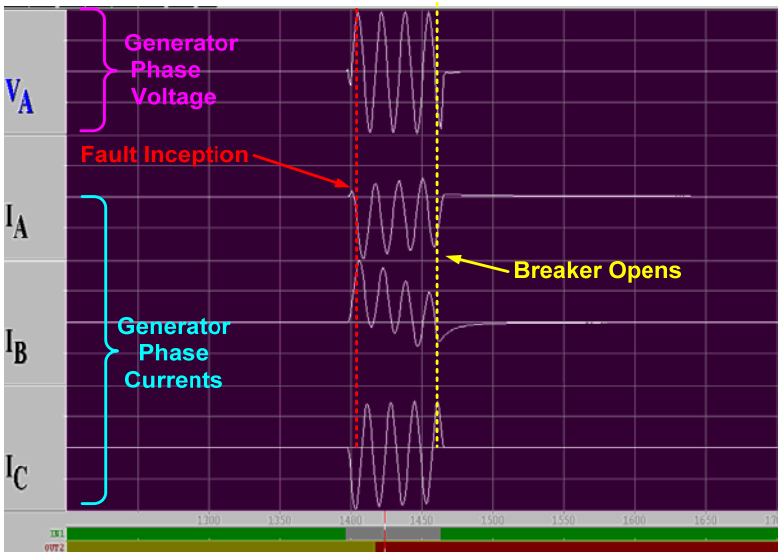

157

Inadvertent Energizing

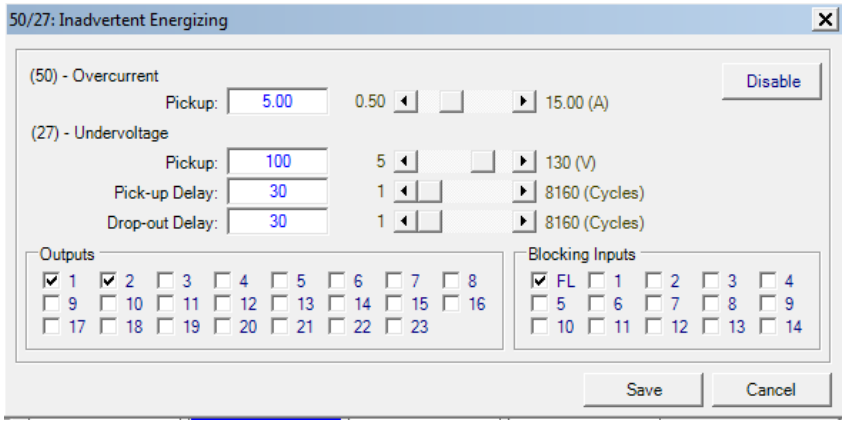

158

Breaker Failure Timeline

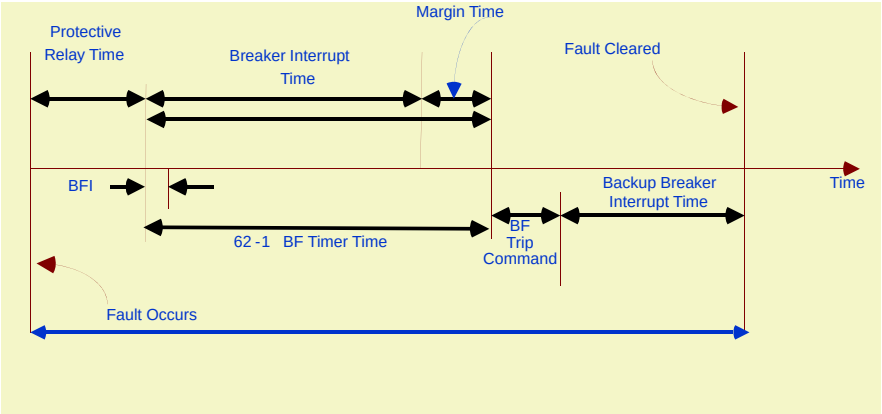

159

Breaker Pole Flashover & Stuck Pole

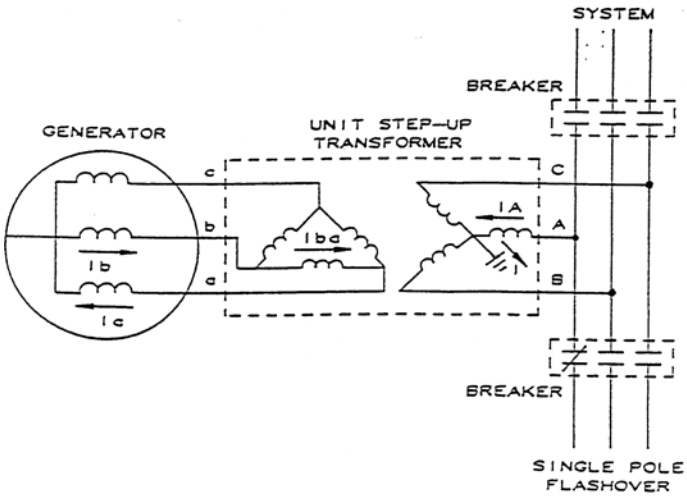

160

Generator Breaker Failure and Pole Flashover: Simplified Conceptual View

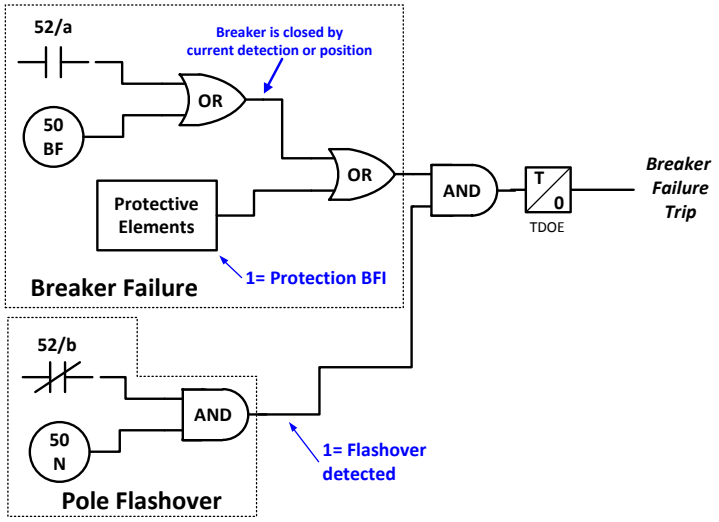

161

Generator Breaker Failure and Pole Flashover

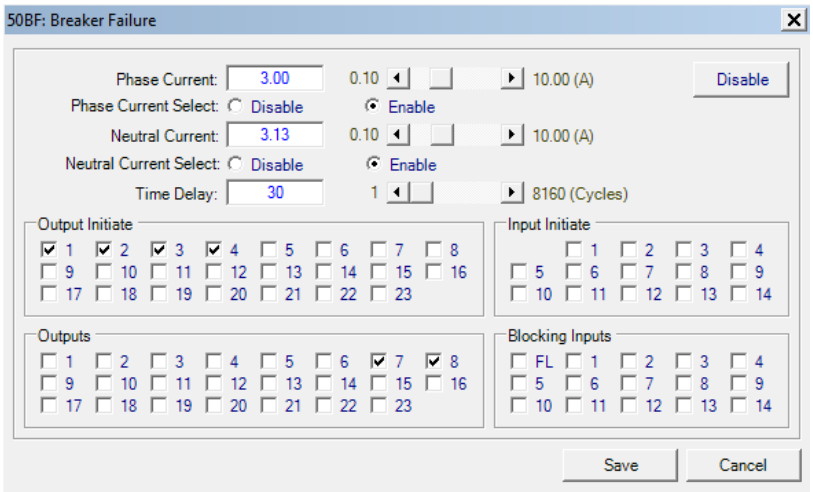

- "Phase Initiate Enable" is made from software selection and enables breaker failure protection
- Output Initiates (Trip Output Contacts) or External Contact Signal Initiates are used to start the breaker failure element
- "Neutral Initiate Enable" is made from software selection and enables pole flashover protection
- 52b contact used to supervise the pole flashover protection

162

Fuse Loss

- **Fuse loss (loss of voltage potential) can cause voltage sensitive elements to misoperate**
  - 51V, 21, 78, 32, 67, 67N, 40
- **Typically performed using two sets of VTs and a voltage balance relay**
- **Some small hydro installations may only have one set of VTs**
- **Use Symmetrical Component and 3-Phase Voltage/Current methods to provide fuse loss detection on a single VT set**

163

Fuse Loss

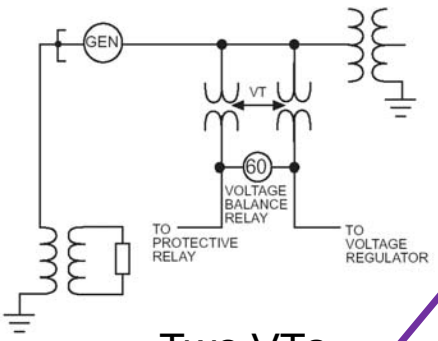

Two VTs

One VT

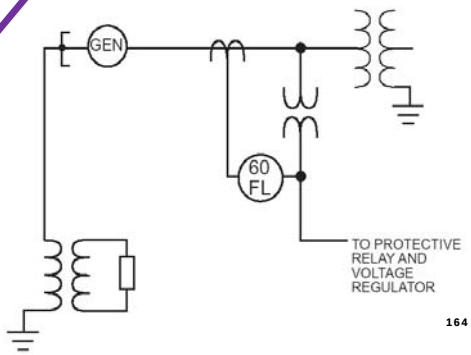

164

Fuse Loss (LOP) Detection:

Symmetrical Components & 3-Phase Voltage/Current Monitoring

- **Use to block voltage dependent elements from misoperating and to alarm**
  - Stops nuisance tripping and attendant full load rejection on LOP
- **1 and 2 phase LOP detection by symmetrical component comparison**
  - Presence of Negative Sequence Voltage and Negative Sequence Current indicates a Fault
  - Presence of Negative Sequence Voltage and absence of Negative Sequence Current indicates a Fuse Loss
- **3 phase LOP detected by voltage and current monitoring**
  - Low 3-Phase Voltages and High 3-Phase Currents indicates a Fault
  - Low 3-Phase Voltages and Low 3-Phase Current indicates a Fuse Loss

165

Generator Tripping and Shutdown

- Generators may be shutdown for unplanned and planned reasons
  - Shutdowns may be whole or partial
  - Shutdowns may lock out (86- LOR) or be self resetting (94)
  - Unplanned
    - Faults
    - Abnormal operating conditions
  - Scheduled
    - Planned shutdown

166

Generator Tripping

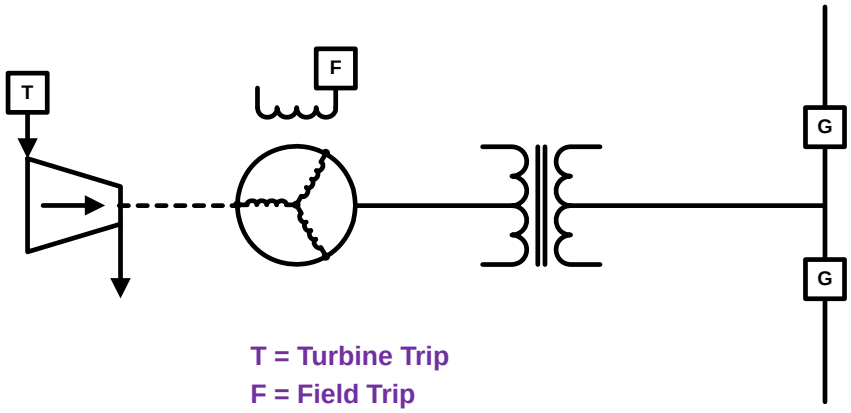

T = Turbine Trip
F = Field Trip
G = Generator Breaker Trip

167

Tripping Philosophy & Sequential Tripping

– Unit separation
- Used when machine is to be isolated from system, but machine is left operating so it can be synced back to the system after separating event is cleared (system issue)
- Only generator breaker(s) are tripped

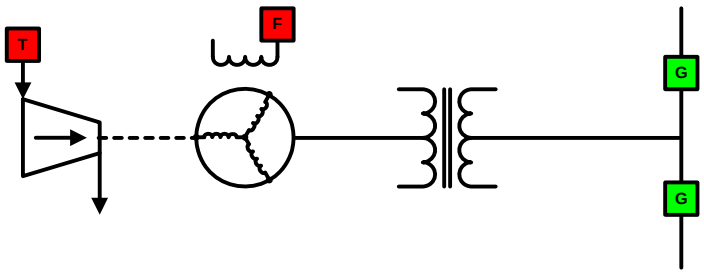

168

Tripping Philosophy & Sequential Tripping

– Generator Trip
- Used when machine is isolated and overexcitation trip occurs
- Exciter breaker is tripped (LOR) with generator breakers already opened

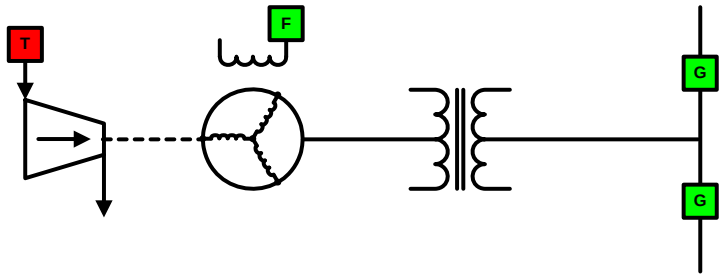

169

Tripping Philosophy & Sequential Tripping

– Simultaneous Trip (Complete Shutdown)
- Used when internal (in-zone) protection asserts
- Generator and exciter breakers are tripped (LOR)
- Prime mover shutdown initiated (LOR)
- Auxiliary transfer (if used) is initiated

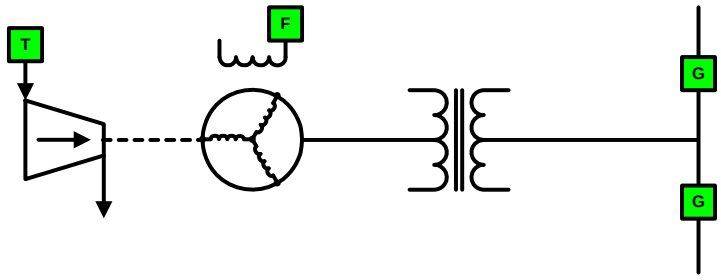

170

Tripping Philosophy & Sequential Tripping

– Sequential Trip
- Used for taking machine off-line (unfaulted)
  - – Generator and exciter breakers are tripped (94)
  - – Prime mover shutdown initiated (94)
  - – Auxiliary transfer (if used) is initiated

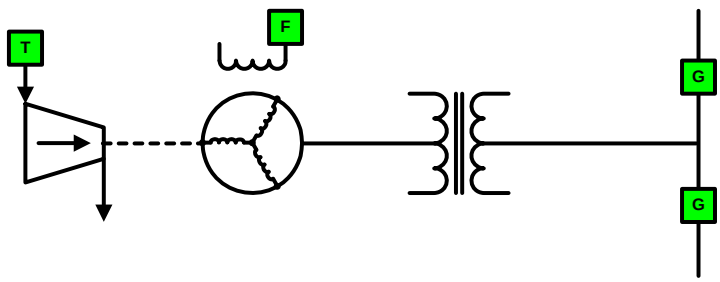

171

Tripping Philosophy & Sequential Tripping

- Back down turbine and excitation
  - – Backing down excitation to allows easier better measurement of power
- Initiate Sequential Trip
  - – Use 32 element that trips G, F and T, but does not do this through a LOR
  - – When a small amount of reverse power is detected, trip G, F and T

172

Trip Logic

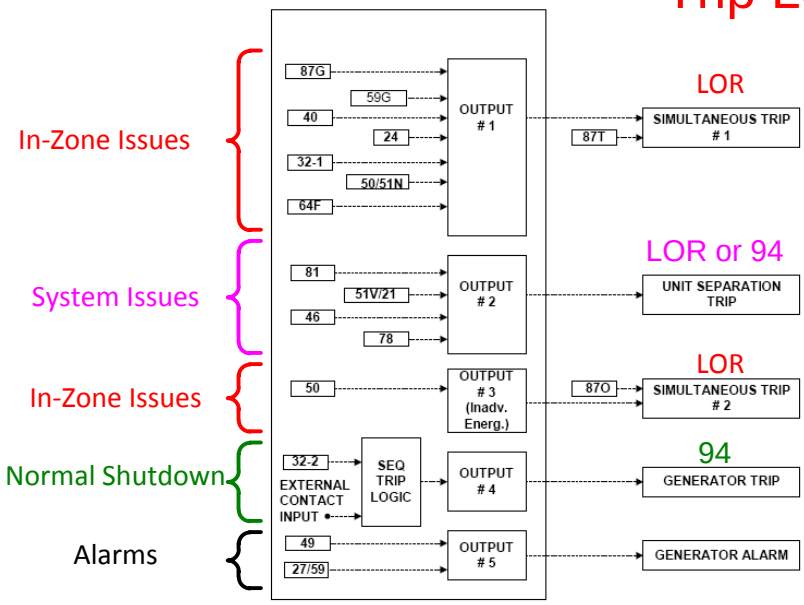

173

Typical Protection Functions for a Large or Important Generator

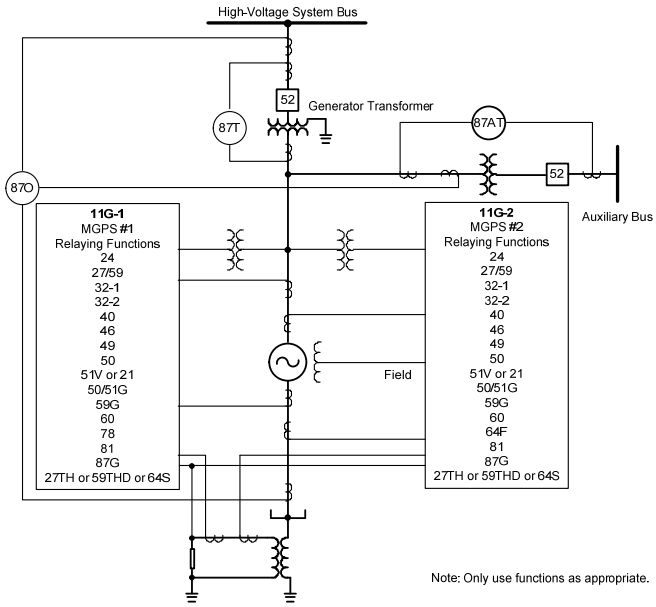

Note: Only use functions as appropriate.

174

Mitigating Reliability Concerns

- Integrating many protection functions into one package raises reliability concerns
- Address these concerns by…
  1. Providing two MGPRs, each with a portion or all of the protection functions (redundancy for some or all)
  2. Providing backup for critical components, particularly the power supply
  3. Using MGPR self-checking ability

175

Aug 2003, NE Blackout: Generator Trips

531 Generators at 261 Power Plants tripped!!!

➢ IEEE PSRC Survey

- Conducted in early '90s, exposed many areas of protection lacking
- Reluctance to upgrade:
  - Lack of expertise
  - To recognize problems
  - To engineer the work
  - The thought that "Generators don't fault"
  - Operating procedures can prevent protection issues

176

Why Upgrade?

- Existing generator protection may:
  - Require frequent and expensive maintenance
  - Cause coordination issues with plant control (excitation, turbine control)
  - Trip on through-faults (external faults), stable power swings, load encroachment and energizing
  - Not follow NERC PRC Standards (PRC = protection and control)
  - Exhibit insensitivity to certain abnormal operating conditions and fault types

177

Why Upgrade?

- Existing generator protection may:
  - Not be self-diagnostic
  - Lack comprehensive monitoring and communications capabilities
    - Not provide valuable event information that can lead to rapid restoration
    - Part of NERC Report comments on the August 03 Blackout
  - Not be in compliance with latest ANSI/IEEE Standards!
    - Asset Reliability, Insurance, Liability Issues
    - C37-102: Guide for the Protection of Synchronous Generators

178

Protection Upgrade Opportunities

- **Improved sensitivity**
  - Loss of Field
  - 100% stator ground fault
  - Reverse power
  - Negative sequence
  - Overexcitation
- **Improved Security**
  - Directionally supervised ground differential protection
  - Distance Element Enhancements
    - Load encroachment blinding
    - Power swing blocking (for stable swings)

179

Protection Upgrade Opportunities

- **New protections**
  - Inadvertent energizing
  - VT fuse loss (integrated)
- **Special applications**
  - Generator breaker failure
    - Pole flashover (prior to syncing)

180

Summary

- Generators require special protection for faults and abnormal operations
- These protections are for in-zone and out-of zone events
- Modern element design matter for security and dependability

181