Role of FACTS Technology on Transmission Grid Reliability

IEEE San Francisco PES
Spring Banquet
May 15, 2003

ABB

FACTS Technology – Need a Guide?

Hitchhiker's Guide[1)] to FACTS Technology describes the role technology plays in increasing reliable power transfers thereby relieving transmission congestion.

1) **Hitchhiker's Guide to the Galaxy by Douglas Adams, BBC miniseries 1981 http://www.bbc.co.uk/cult/hitchhikers**

Hitchhiker's Guide – Table of Contents

- Transmission Characteristics
- Impact of Deregulation on Transmission – *Theory of Indeterminacy*
- Transmission Provider Response – *Marvin the Paranoid Android*
- Cost of Congestion
- Congestion Relief Technologies – *Don't Panic!*
  - System Analysis
  - Reconductoring
  - FACTS – *Infinite Improbability Drive*
  - HVDC – *Hyper Space Bypass*
- Application Examples
- Conclusions – *Restaurant at the End of the Universe*

AC Transmission Network Characteristics

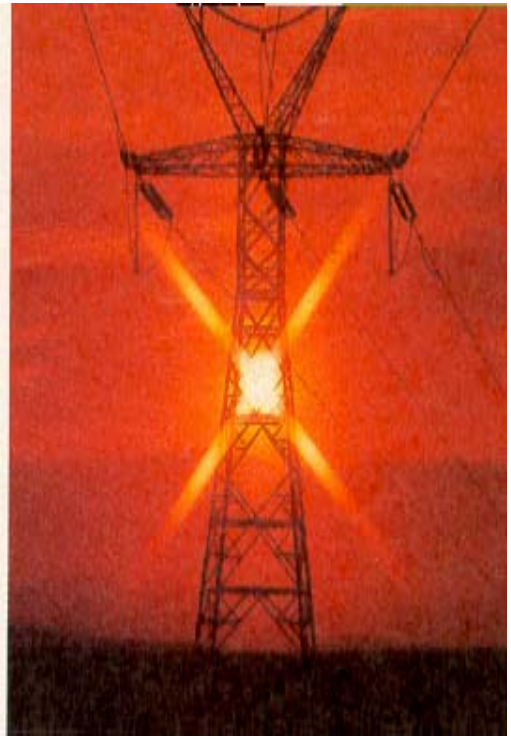

- Power flow uncontrolled
- Circuits may be overloaded or underutilized
- Reserve capacity required for contingencies
- Variable reactive power demand
- Requires voltage control and dynamic reactive power reserve
- Often limited to less than thermal by instability or inadequate voltage support
- Transmission capacity a function of distance and intermediate voltage support
- Finite limit to cable length
- Synchronous

Impact of Deregulation on Transmission

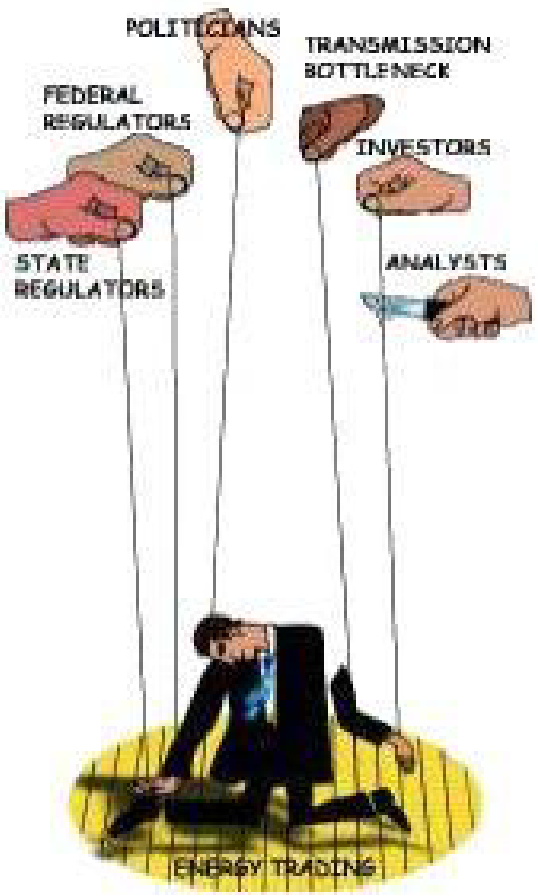

- Transmission transactions growing
- Transmission investment declining
- Resource diversity declining
- Generators access to markets limited
- More regional transmission assessment by non-owners
- Regulatory power struggle
- Market manipulation - *e.g. Deathstar*
- Transmission congestion is increasing– attack of the free-riders
- Economic incentives to relieve congestion inadequate

Barriers to Transmission Investment

Theory of Indeterminacy

- Public opposition
- Lengthy and uncertain process
- Asset utilization
- Will it be bypassed?
- Regulatory uncertainty
- How will market risk be rewarded?
- Financial viability
- Obligation to serve

Response of the Transmission Provider

Marvin the Paranoid Android

- Cut costs
- Sell assets
- Merge, spin off, change name
- Diversify
- Join an ISO[1)], form an RTO[2)]
- Never mind - form a larger RTO
- If I build it, will anybody come?
- Accept regulated rate of return?
- FTR's, CRR's
- Do I really want to be in this business?

[1)] Independent System Operator
[2)] Regional Transmission Organization

Cost of Congestion

- FERC estimated costs for 16 individual constraints that ranged up to $700M/y (eastern NY) - *Electric Transmission Constraint Study*
- ISO New England estimates the costs of congestion in New England are $125-600M/y - *2001 Regional Transmission Expansion Plan*
- Cost of congestion on Path 15 > $222M over 16 mo prior to 12/00 - *California ISO*
- Congestion relief – overall net efficiency gain but there are individual winners and losers!

Interregional Congestion

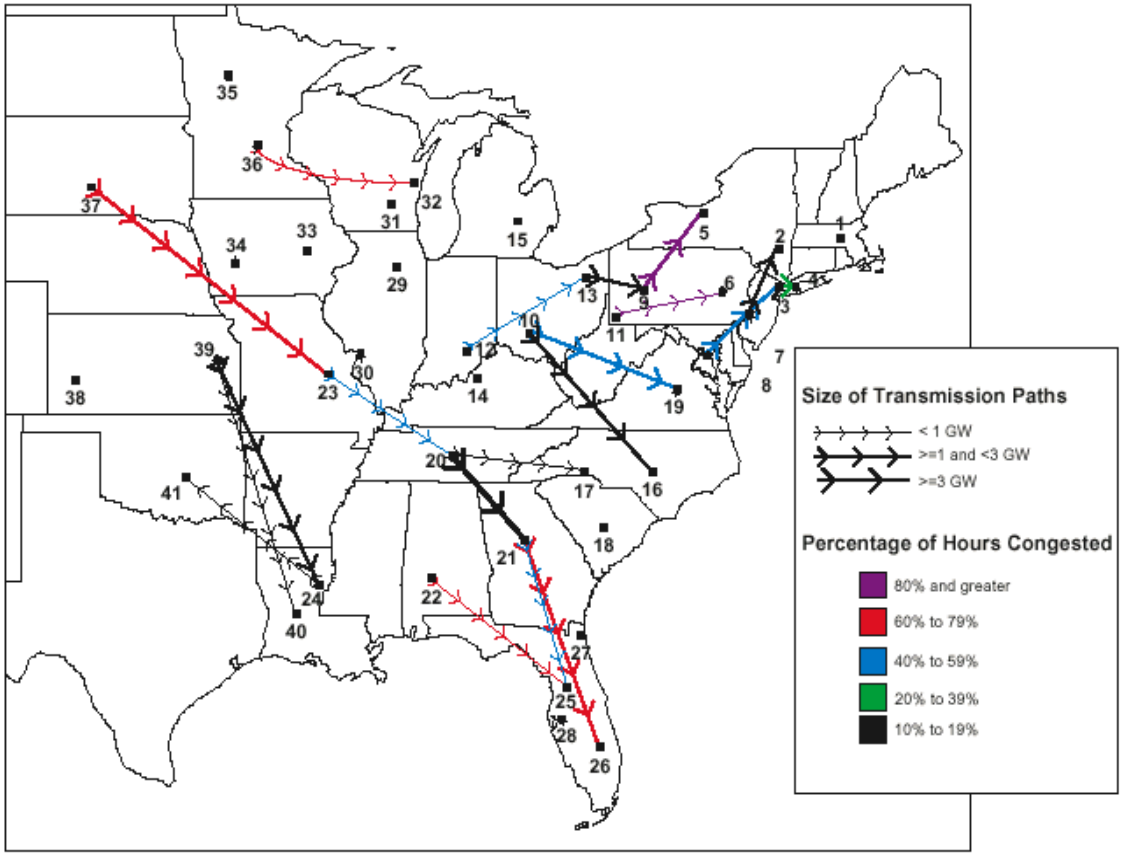

- Congestion curtails economic dispatch
- Interregional or localized
- Congestion - time is money
- Raise limits by new lines or by technology
- Solutions – FACTS[1)] & HVDC [2)]

Source: National Transmission Grid Study - DOE May, 2002

1) Flexible Alternating Current Transmission Systems
2) High Voltage Direct Current

Congestion Relief Technologies – *DON'T PANIC!*

- System Analysis – Limits and Cost of Congestion
- Re-conductor – Increases Reactive Power Demand
- FACTS
  - Dynamic Shunt Compensation – SVC and STATCOM
  - Controlled Series Compensation - TCSC
  - Power Flow Control – UPFC and SSSC
- HVDC
  - Conventional - LCI
  - Capacitor Commutated Converter – CCC
  - VSC Based Transmission
  - Grid Power Flow Controller – GPFC

FACTS Benefits

- AC transmission lines generally operate below their thermal capacity
- Limitations often due to
  - Voltage
  - Stability
- FACTS devices raise transfer capability towards thermal limit

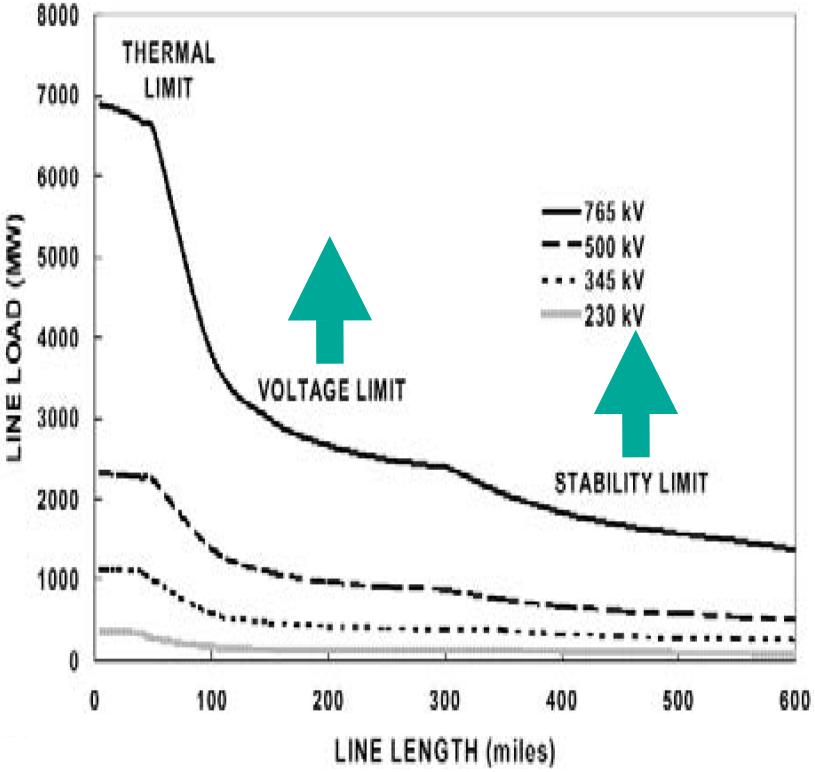

Transmission constraints as functions of line length
Source: Eric Hirst, Edison Electrical Institute

Cost of Congestion - Case Study Pacific DC Intertie

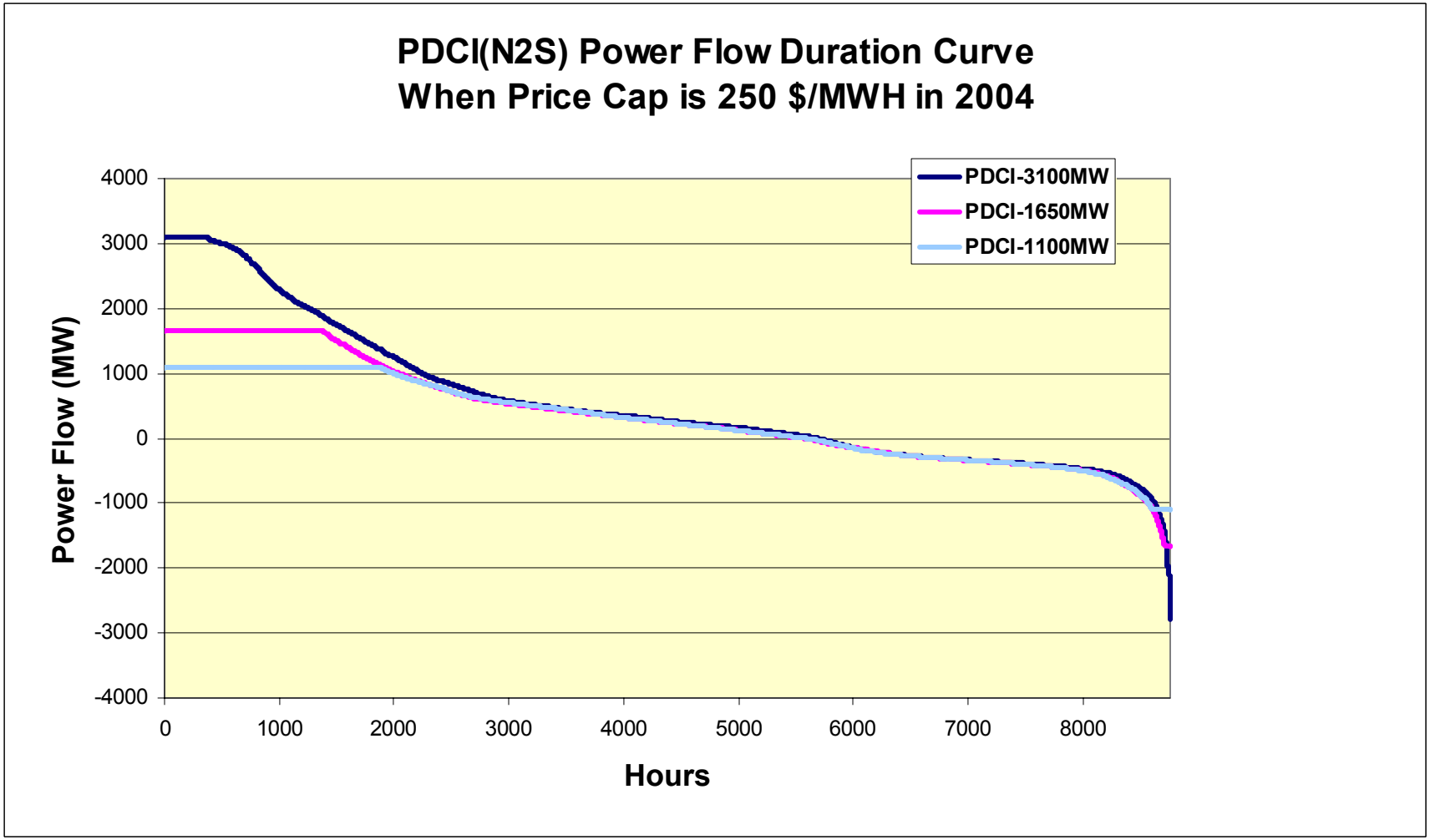

Line Re-conductoring

Comparison of 1033 kcmil 54/7 SSAC [1] and ACSR[2]

	ACSR	SSAC	% Change
Line Current Rating (A) Normal Summer (95ºF)	1300	2190	168%
Line Rating (MVA) Normal Summer (95 ºF)	$\sqrt{3}(1300)V_{ll}$	$\sqrt{3}(2190)V_{ll}$	168%
Maximum Line Inductive Reactive Power Demand (excluding V_{ll}^2 Bc)	$3*(1300)^2 X_\ell$	$3*(2190)^2 X_\ell$	**284%**

Increase in line capacity by reconductoring but must supply the additional reactive power demand – application for FACTS!

1) Steel-Supported Aluminum Conductor
2) Aluminum Conductor Steel-Reinforced

Congestion Relief

- Minimal environmental impact
- Maximize use of existing resources
- Adapted to new electric market
- Controllable
- Responsive

→ **Study - New Technology FACTS, HVDC, SSAC**

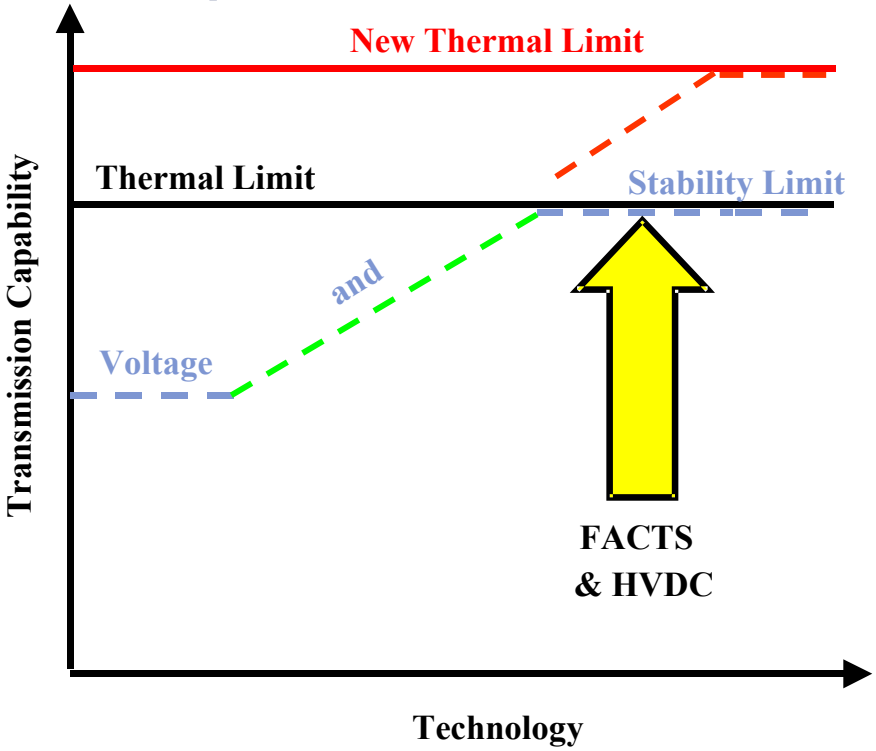

SVC and STATCOM - Established Technologies

STATCOM - VSC

- 19 VSCs installed since 1997
- In service today >1500 MVA
- >300 MVA in manufacturing

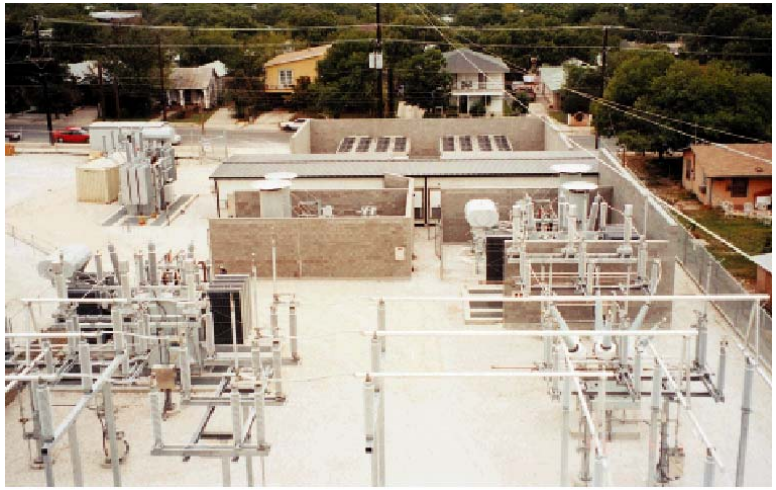

VSC w. BtB, Eagle Pass, TX

SVC

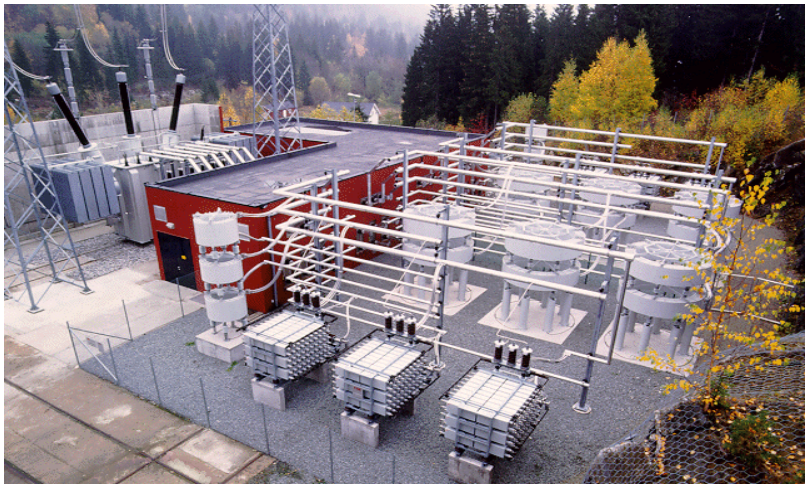

+/- 160 Mvar, 420 kV, Sylling, Norway

- >160 SVC utility inst. since 1975
- In service today > 32 000 MVA
- > 500 MVA in manufacturing

Increased Transfer with Voltage Support

SVC – AC Control of Reactors & Capacitors

STATCOM – Synthesize AC from DC

- **Maximum power flow depends on network and <u>voltage support</u>**
- **Steady state voltage via slow devices, e.g., switched capacitors, tap changers**
- **Dynamic reactive power reserve required for contingencies**
- **Dynamic voltage support requires fast action, e.g., generators, SVC[1)] or STATCOM[2)] - *all VARS are not the same***

1) Static Var Compensator
2) Static Compensator (ABB SVC Light)

Infinite Improbability Drive

Increased Transfer with Voltage Support

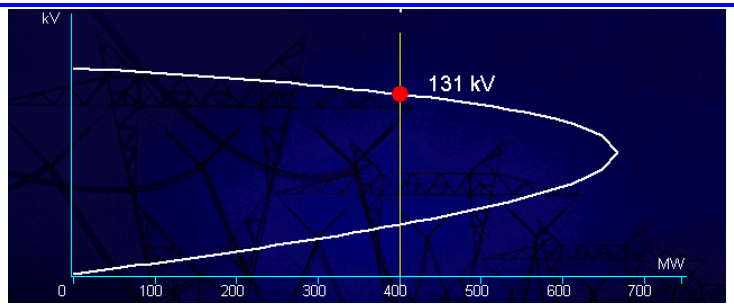

Normal System Conditions – 2000 MVA Short Circuit

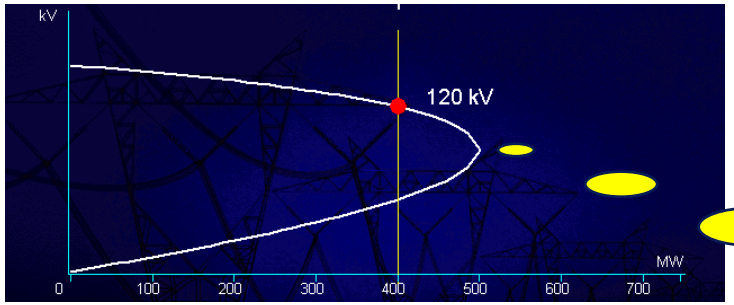

n-1 Contingency – 1500 MVA Short Circuit Level

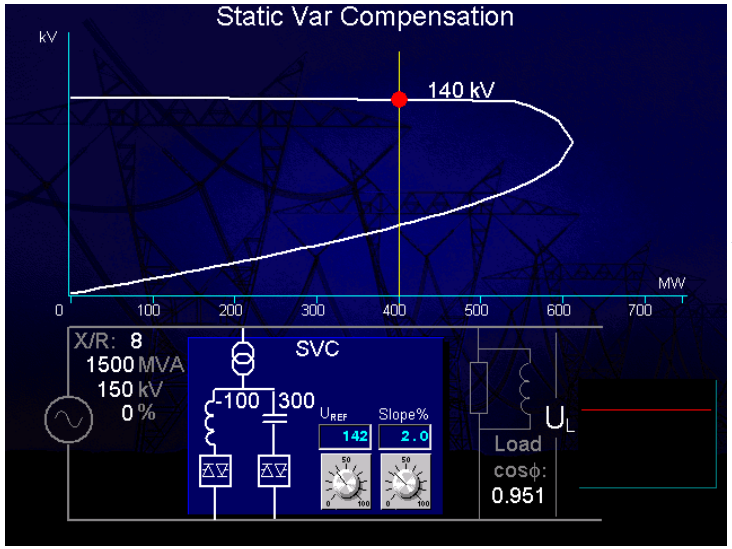

- **Top: P-V curve at bus – all lines in service**
- **Middle: P-V curve at bus – post contingency without compensation**
- **Bottom: P-V curve at bus – post contingency with compensation**

Yonder there be dragons!

Improved Post-Contingency Voltage Profile due to Dynamic Reactive Support by SVC or STATCOM

SVC Building Blocks

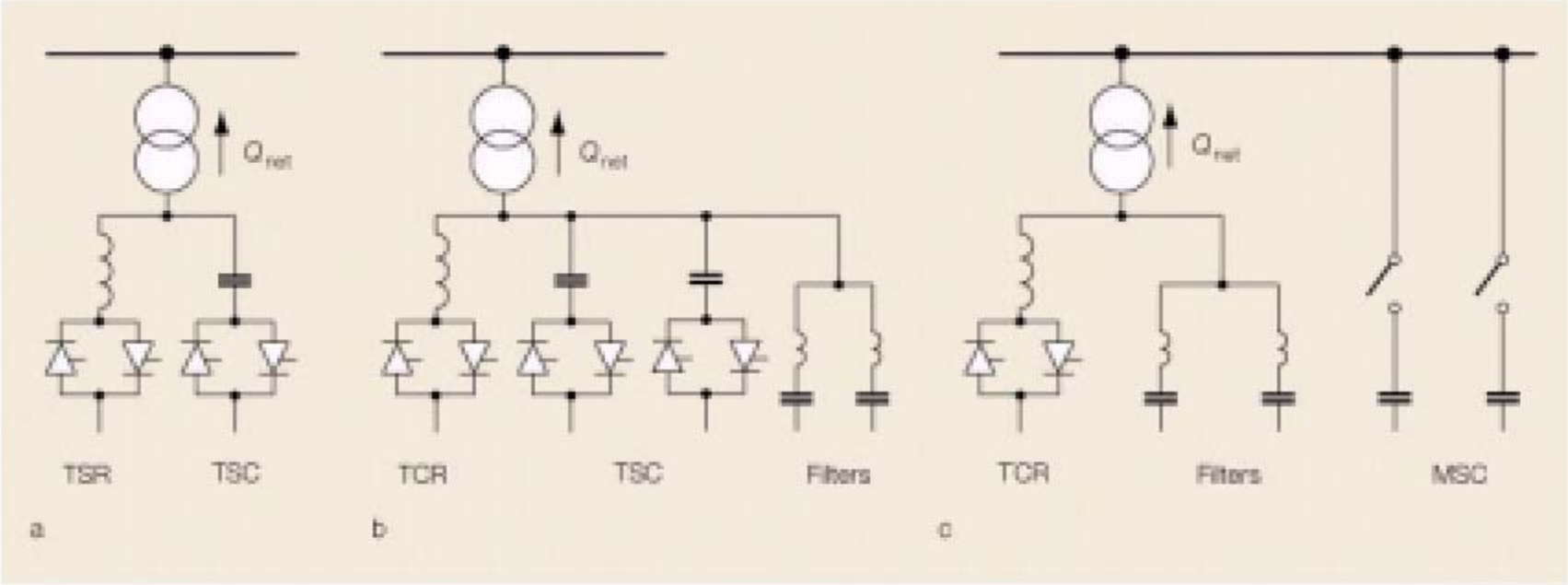

SVC configurations used to control reactive power compensation in electric power systems

a *TSR-TSC configuration*
b *TCR-TSC configuration*
c *TCR-MSC configuration*

Q_{net} *Net reactive power flow to network*

STATCOM – SVC Light

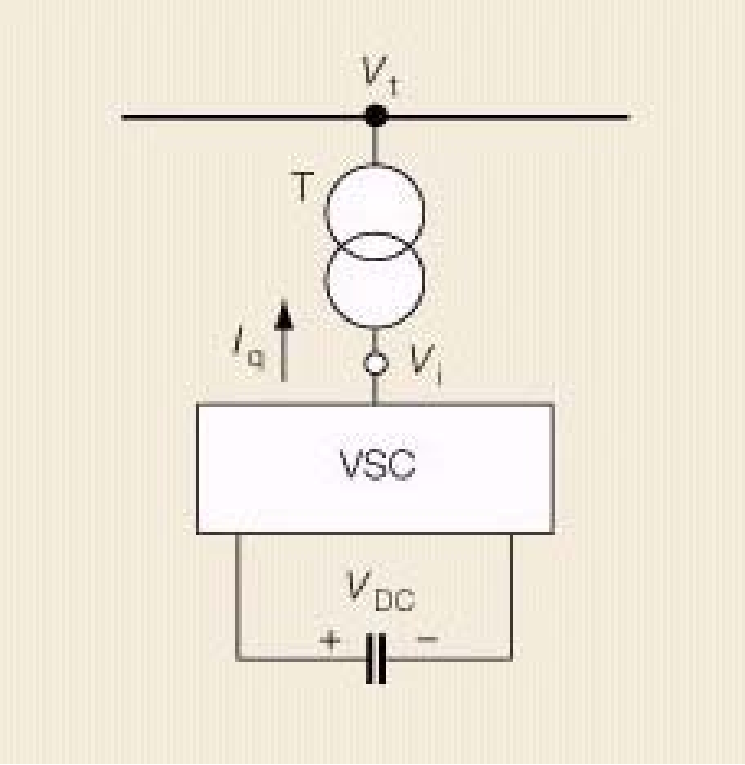

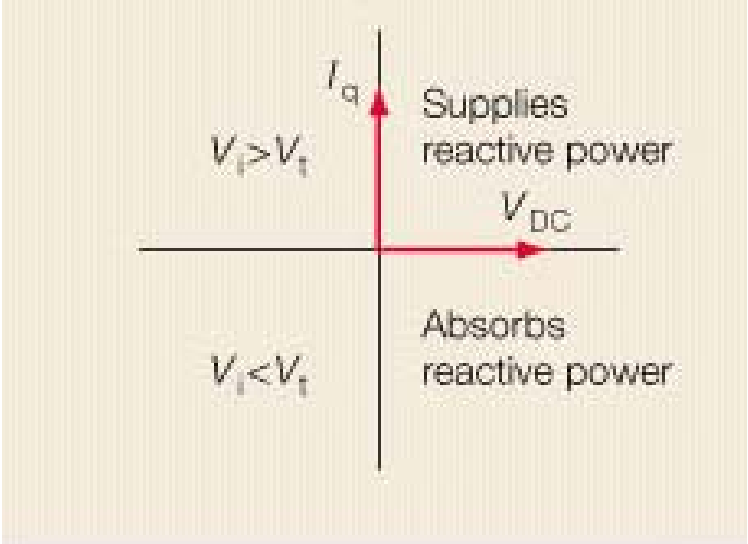

I_q *Converter output current*
V_i *Converter voltage*
V_t *Terminal voltage*

Power Electronics

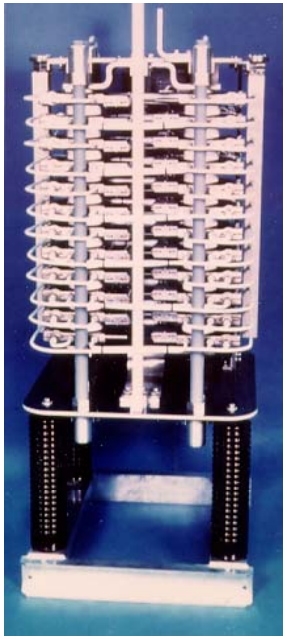

SVC - Thyristor Valve

- Controls AC Current – switched (TSC or TCR), phase control (TCR)
- Anti-parallel thyristors (SCR)
- Up to 4000 A, ~ 8 kV per single device

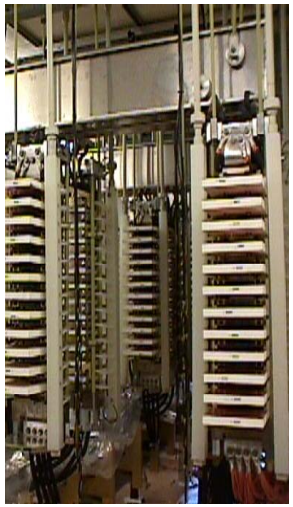

SVC Light - IGBT Valves

- AC/DC VSC converter
- Insulated gate bipolar transistor
- High switching frequency for PWM
- Anti-parallel diodes
- Up to 1500 A, 2.5 kV per parallel array

Insulated Gate Bipolar Transistor (IGBT)

- Same IGBT for all applications

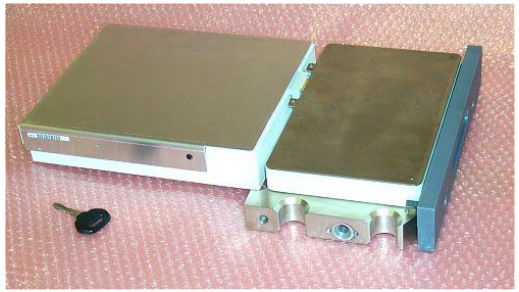

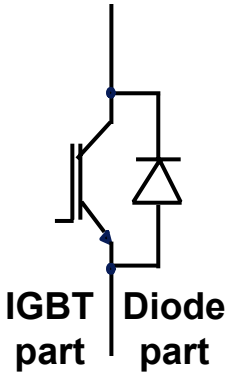

The IGBT

Nominal current	1300 A
Rated voltage	2500 V
Switching frequency	1350 Hz
Presspack	

TSC/TCR Operation

Total current
I_N

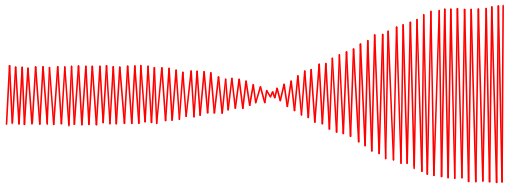

Capacitor current
I_C

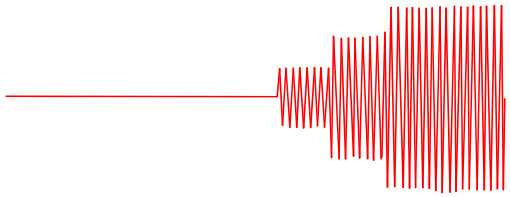

Reactor current
I_R

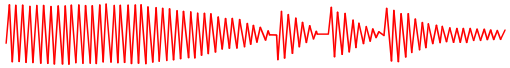

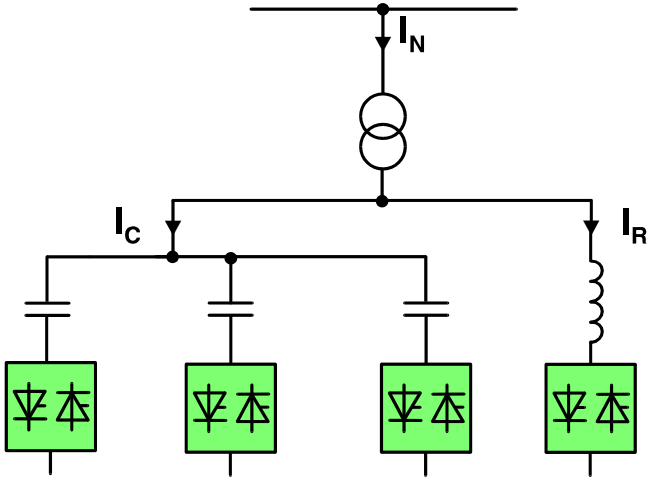

Pulse Width Modulation

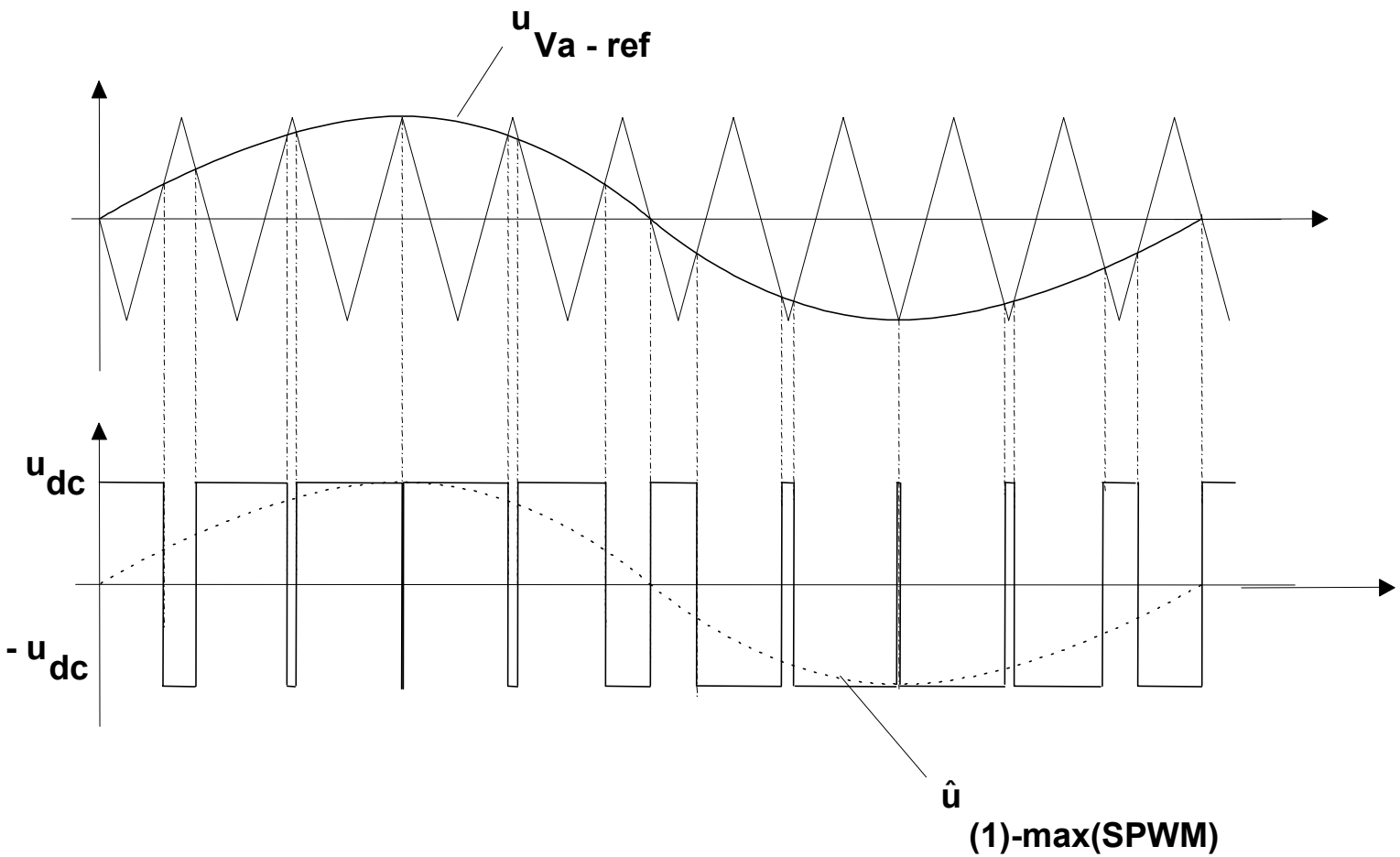

STATCOM – 3-Level Converter with PWM

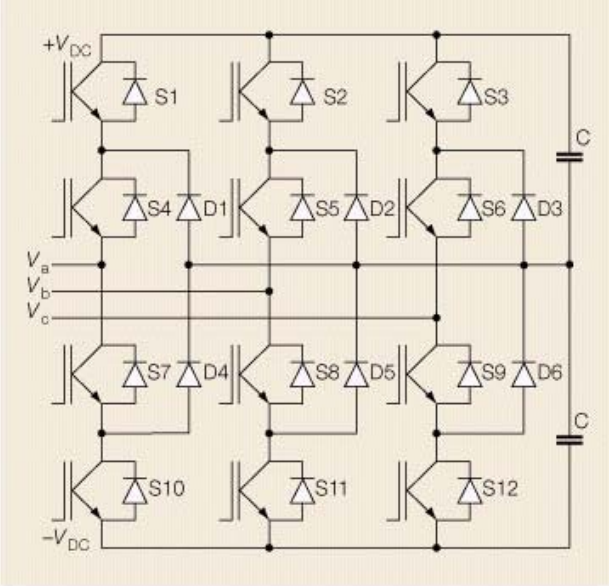

Basic three-level voltage source converter

S1–12 *IGBT stacks* C *DC capacitor*
D1–6 *Diode stacks*

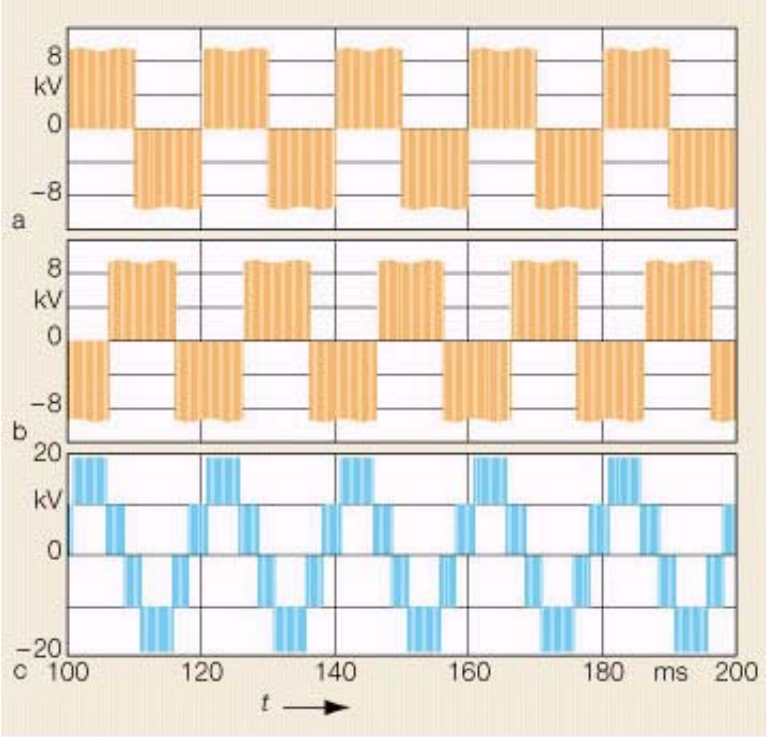

Converter terminal voltage waveforms with pulse-width modulation

a, b *Line-to-midpoint voltage*
c *Line-to-line voltage*

Filter Bus Voltage

Voltage at Filterbus, kV. No filter

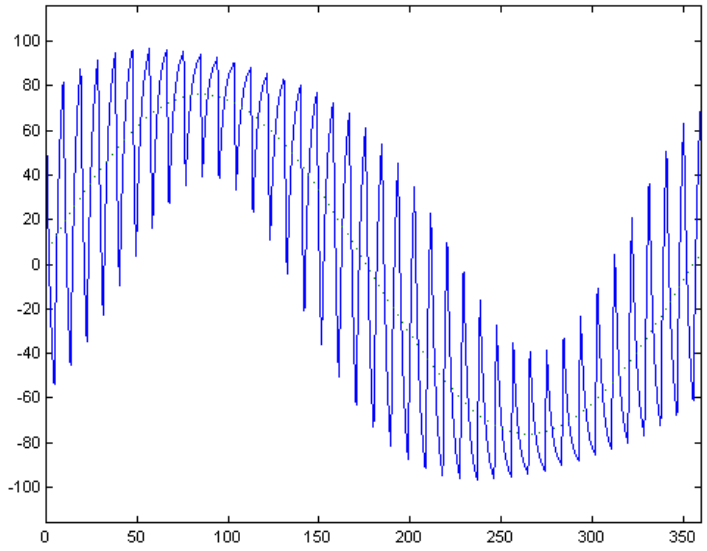

Voltage at Filterbus, kV.

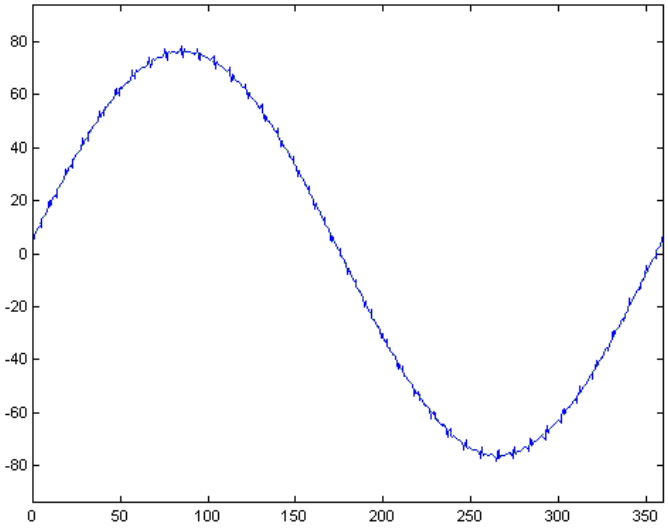

Harmonic Spectrum

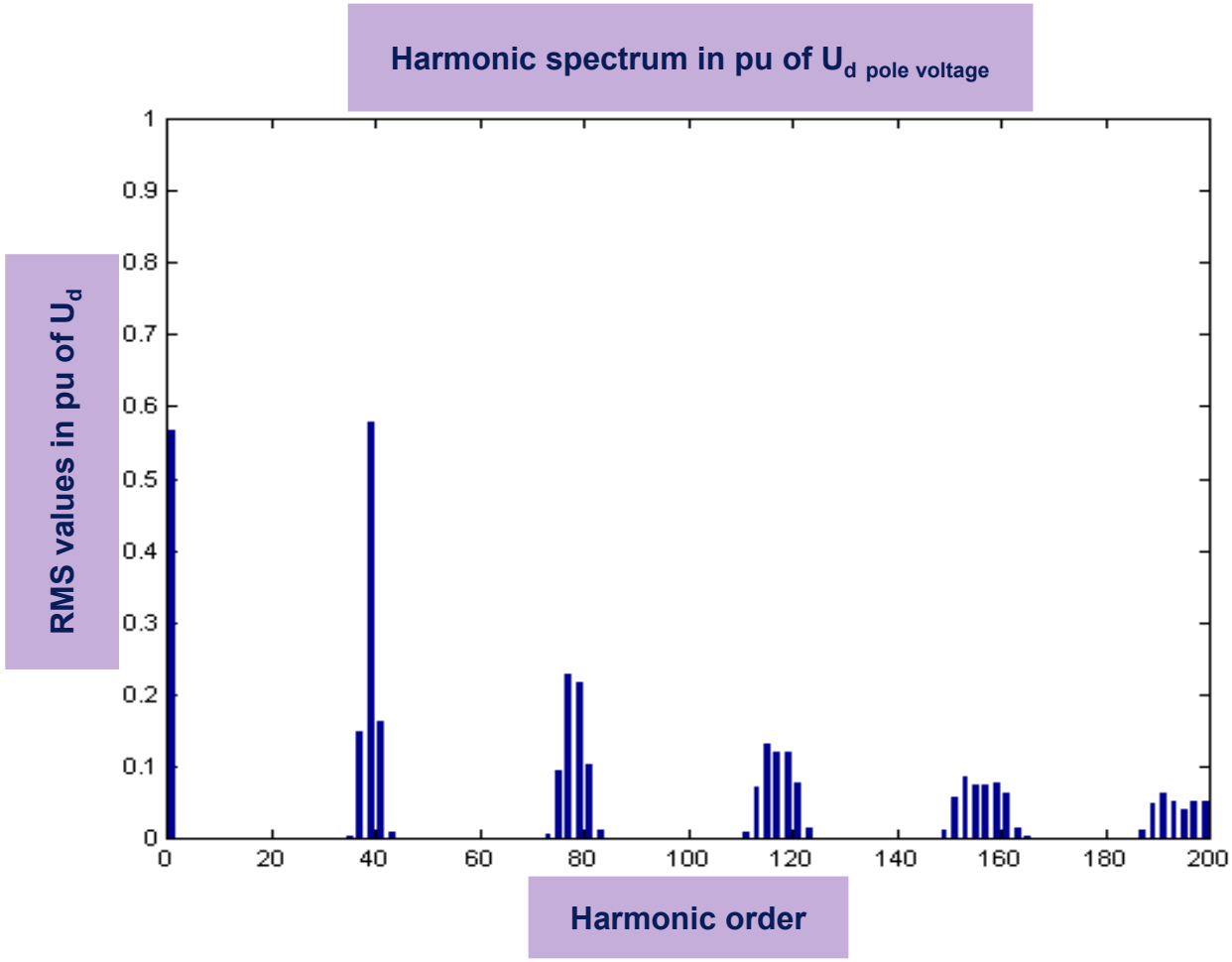

Current-Voltage Characteristic - STATCOM

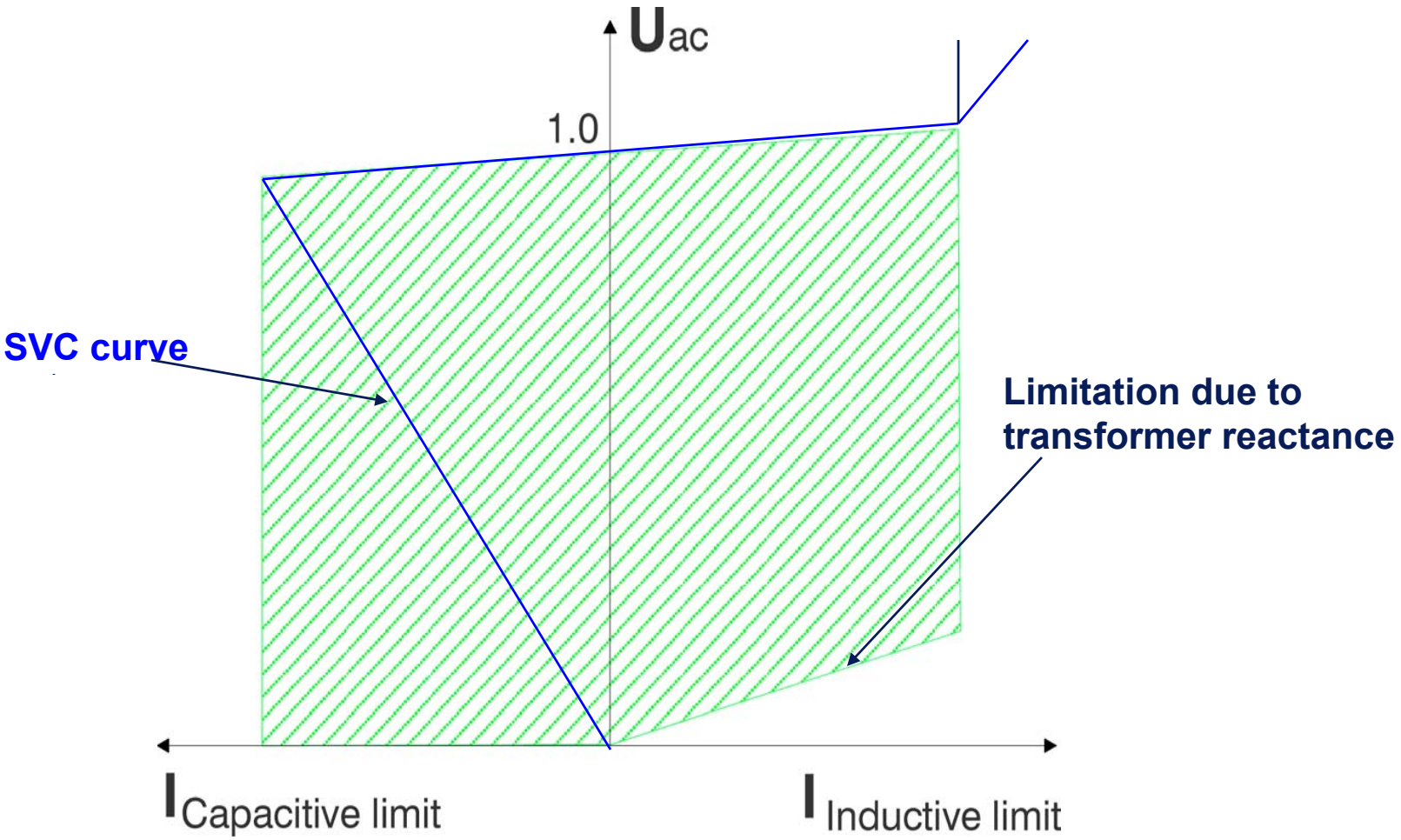

Shunt Compensation – Fixed + Dynamic

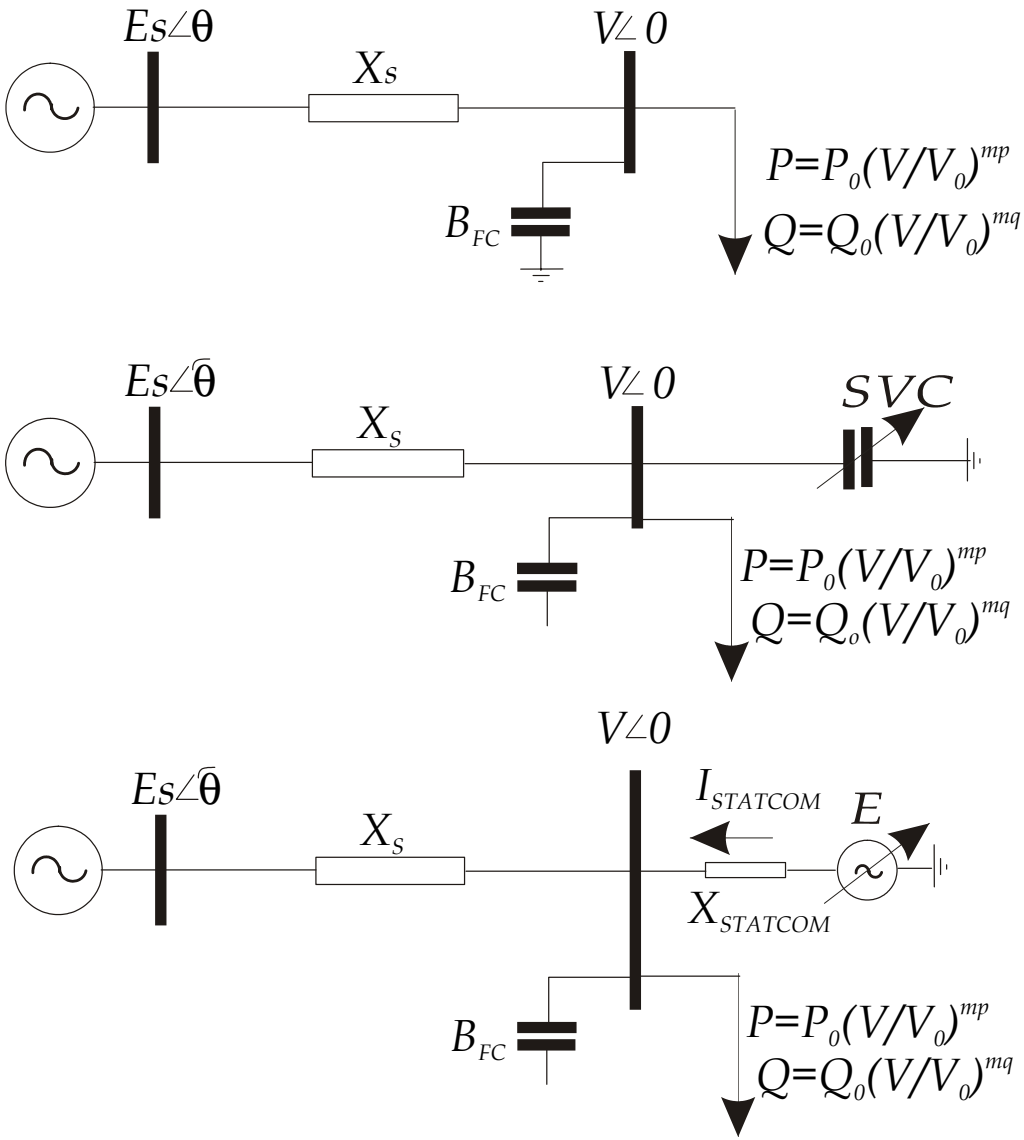

- Fixed compensation to hold unity voltage at nominal conditions with Ssc=10p.u. (Xs=0.1p.u.)
- SVC and STATCOM MVAR equal to 0.5p.u. @ 1.00p.u. voltage
- Load equal to 2.3 + j0.8 p.u.
- Load voltage sensitivity: power mp=1, reactive power mq=2

Voltage Regulation v. System Impedance

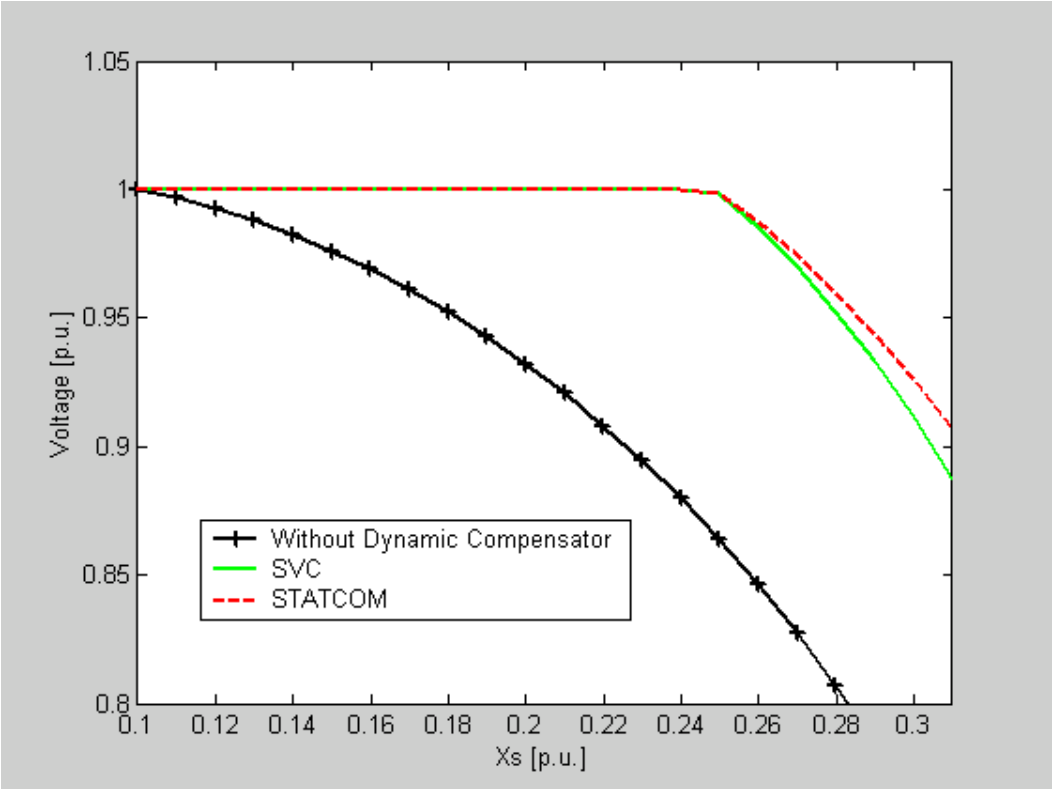

- Both SVC and STATCOM regulate the voltage up to an Xs of about 0.25p.u.
- Above this level both compensators hit their limit
- If the contingency reduces Xs to 0.33p.u., the voltage is about 1.7% less with the SVC

Overvoltage v. Load Rejection

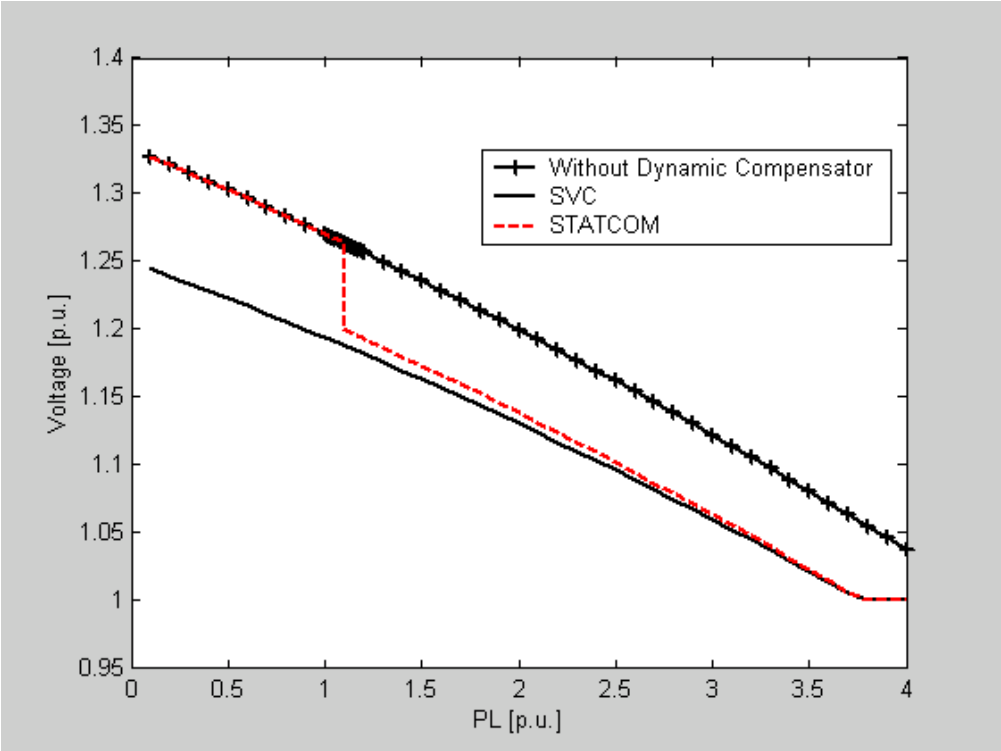

- Load level is increased up to 4.0 p.u.
- Fixed compensation is increased from 1.1 to 2.5 p.u.
- Typical SVC can absorb reactive power up to OV of 1.3p.u. until FC are switched off to reach SVC continuous OV rating of 1.1p.u.
- Typical STATCOM can absorb reactive power up to OV of 1.2p.u. until FC are switched off to reach continuous OV rating of 1.1p.u.

Transient Voltage Stability – Equivalent System

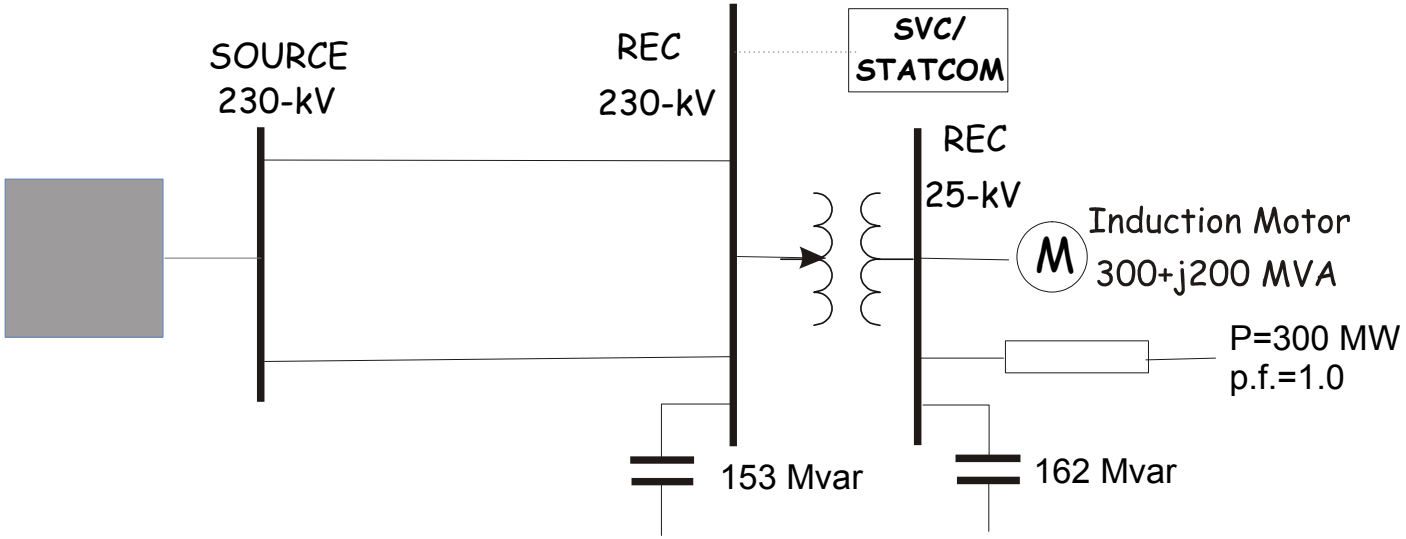

- 600 MW load, 50% induction motor, 50% resistive
- Load supplied by two 113 km 230 kV lines
- Three-phase permanent fault at midpoint of one line
- SVC gain supervised to compensate for weaker systems

Recoveries with Equal Nominal Ratings

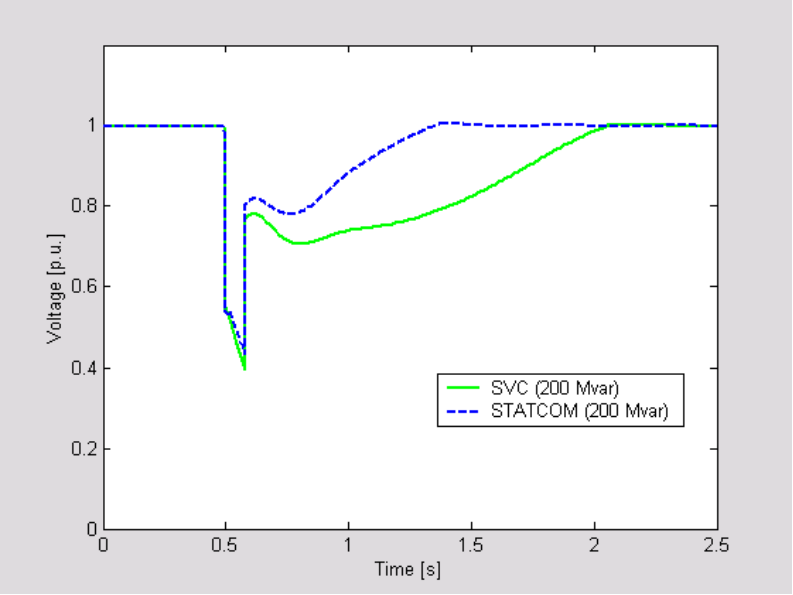

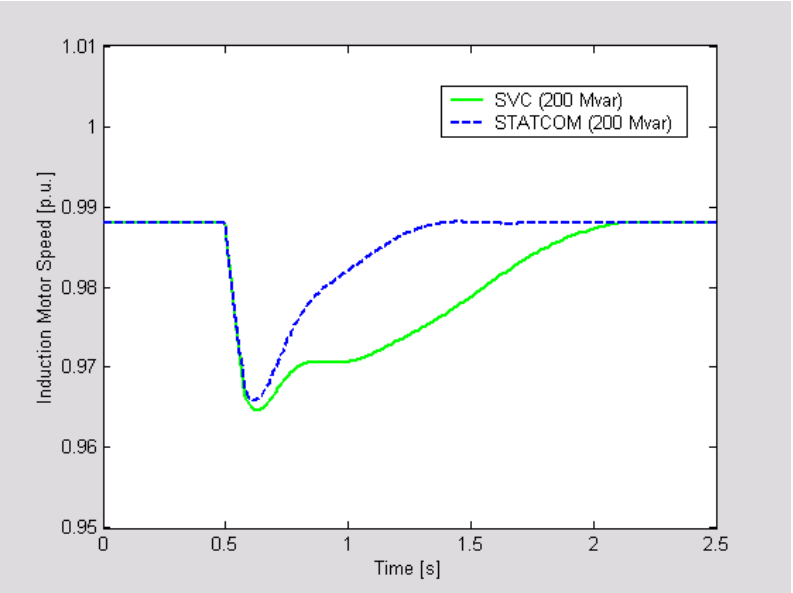

- **SVC – 200 MVAR @ 1.00 p.u. voltage**
- **STATCOM – 200 MVAR @ 1.00 p.u. voltage**

Recoveries with Functionally Sized SVC

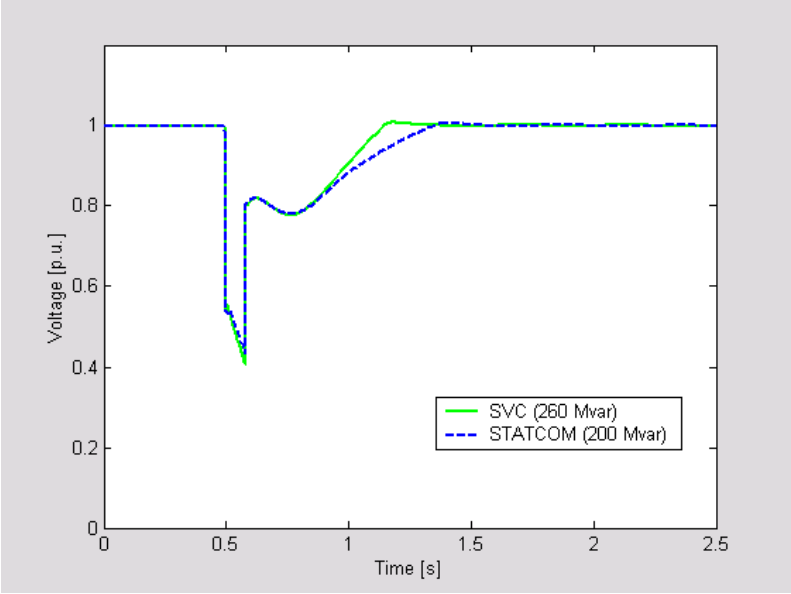

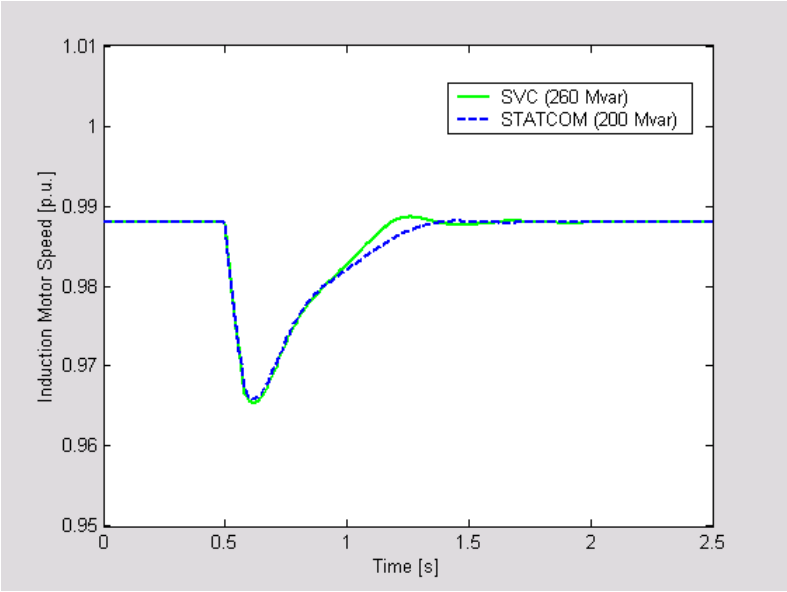

- **SVC – 200 MVAR @ 1.00 p.u. voltage rated 260 MVAR dynamic overload**
- **STATCOM – 200 MVAR @ 1.00 p.u. voltage**

Shunt Compensation, building blocks

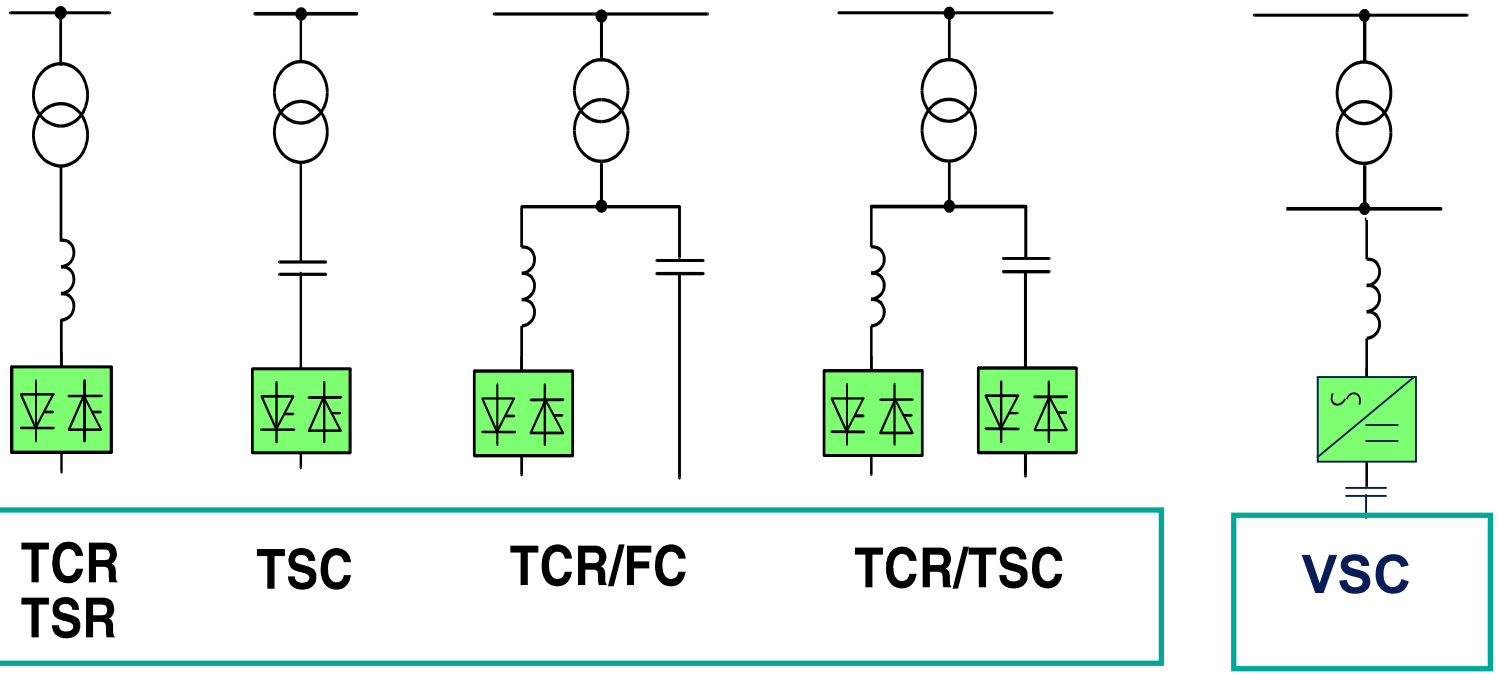

Classical switched and phase control

SVC Light®
STATCOM
Continuous control

The building blocks are the base, the arrangement is the solution

Series Compensation – Improves Voltage Profile

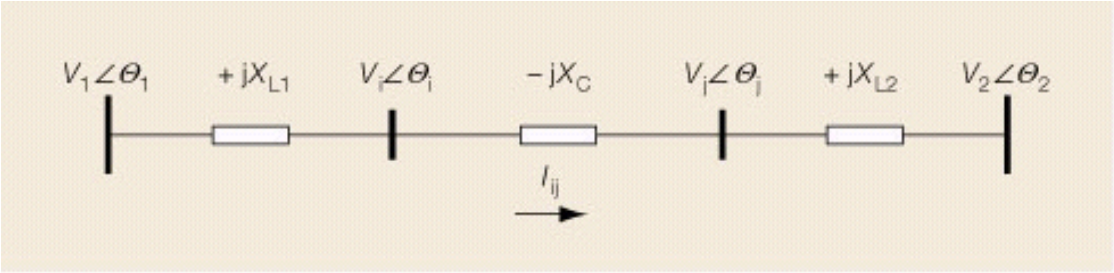

A series-compensated transmission system

I_{ij}	*Current between buses i and j*	$V_{i,j}$	*Voltage magnitude, buses i and j*
$\Theta_{1,2}$	*Voltage angle, buses 1 and 2*	X_C	*Series capacitor reactance*
$\Theta_{i,j}$	*Voltage angle, buses i and j*	$X_{L1,L2}$	*Line segment reactances*
$V_{1,2}$	*Voltage magnitude, buse 1 and 2*		

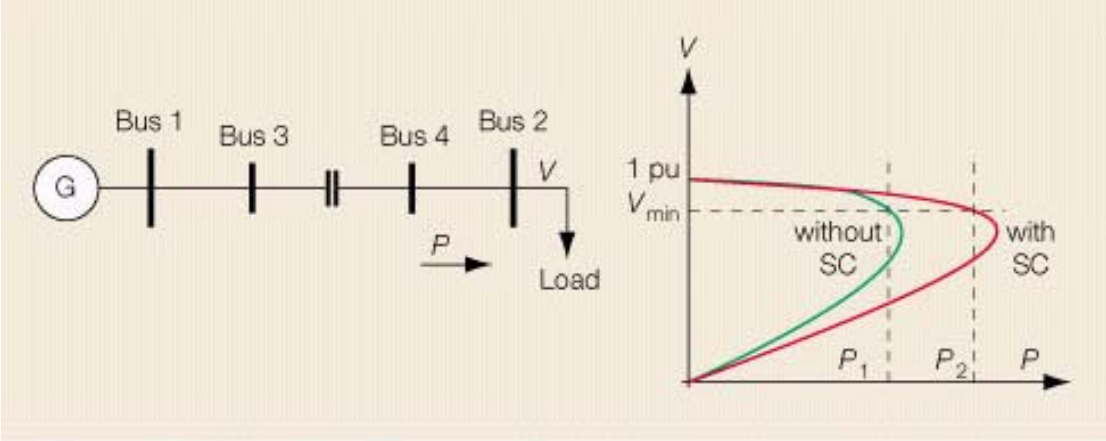

Voltage profile for a simple power system

P	*Power*	*SC*	*Series capacitor*
V	*Voltage*		

Series Compensation – Improves Stability Margin

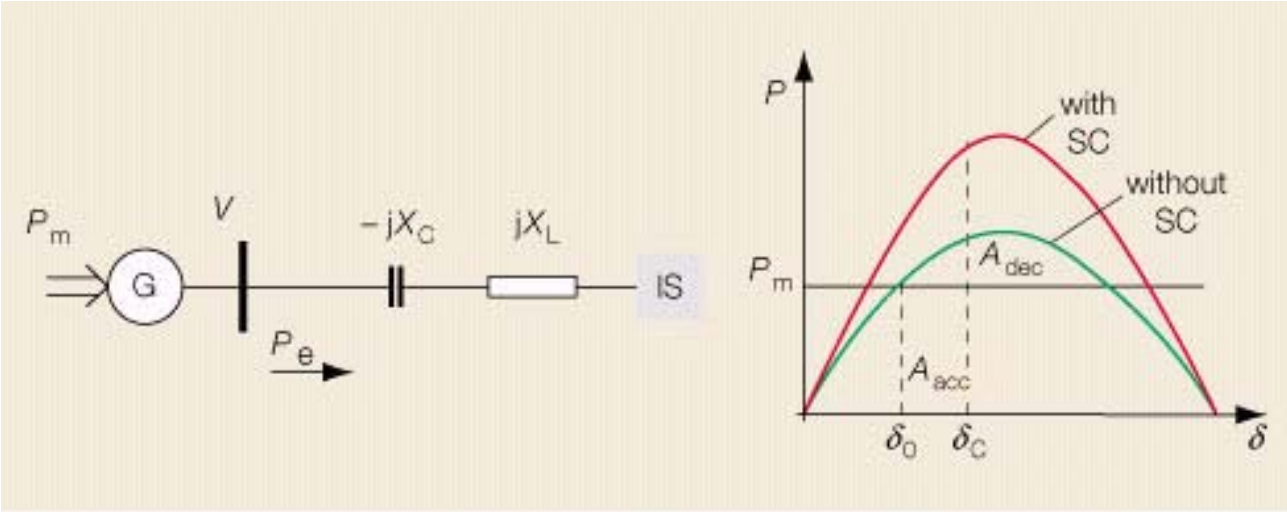

Enhancing the transient stability margin by means of a series capacitor

A_{acc}	*Accelerating energy*	P_m	*Mechanical power to generator*
A_{dec}	*Retarding energy*	X_C	*Series capacitor reactance*
δ	*Generator angle*	X_L	*Line reactance*
δ_0	*Pre-fault generator angle*		
δ_C	*Angle at fault-clearing*	IS	*Infinite source*
P_e	*Electrical power from generator*	SC	*Series capacitor*

Series Compensation – Increases Transfer Capability

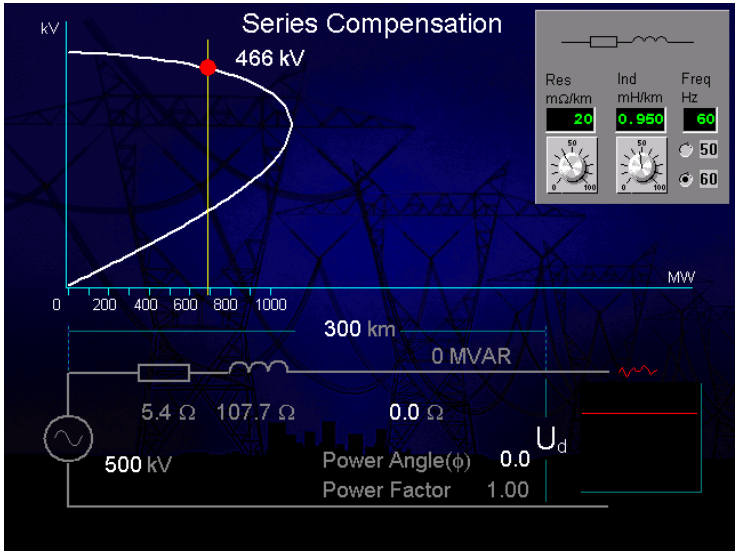

Voltage Profile - Uncompensated

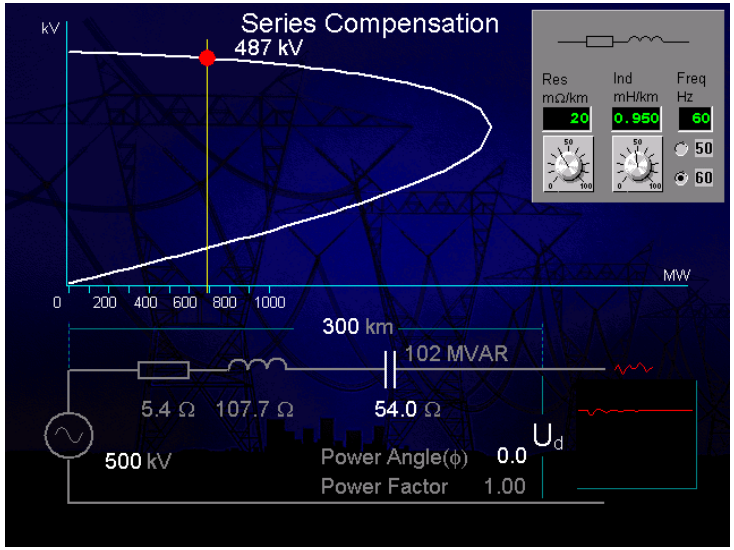

Voltage Profile - 50% Compensation

- **Series capacitors – "shorter" lines and improved voltage profile**
- **Reactive power supply proportional to current squared**
- **Passive – Automatic post contingency reactive support to mitigate voltage drop**
- **Turbo available - thyristor control to boost compensation or damp oscillations (TCSC)**

Thyristor Controlled Series Compensation

- **Series compensation can be boosted, oscillation damped and SSR mitigated by thryristor control, e.g. TCSC**

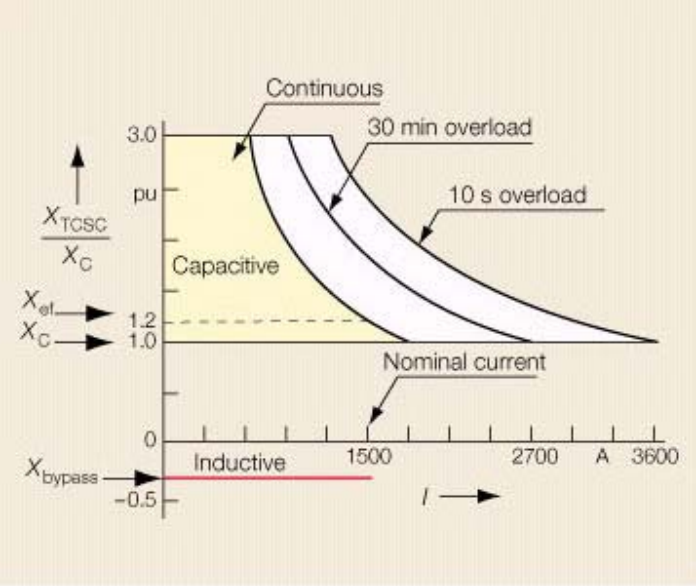

Impedance-current characteristic of the TCSC installed in the Imperatriz substation of Brazil's North-South Interconnection.

I	*Line current*
X_{TCSC}	*TCSC reactance*
X_{ef}	*Nominal boost level*
X_C	*Unity boost level*
X_{bypass}	*Boost level at TCSC bypass*

View of the Imperatriz TCSC

SSR Mitigation by means of CSC

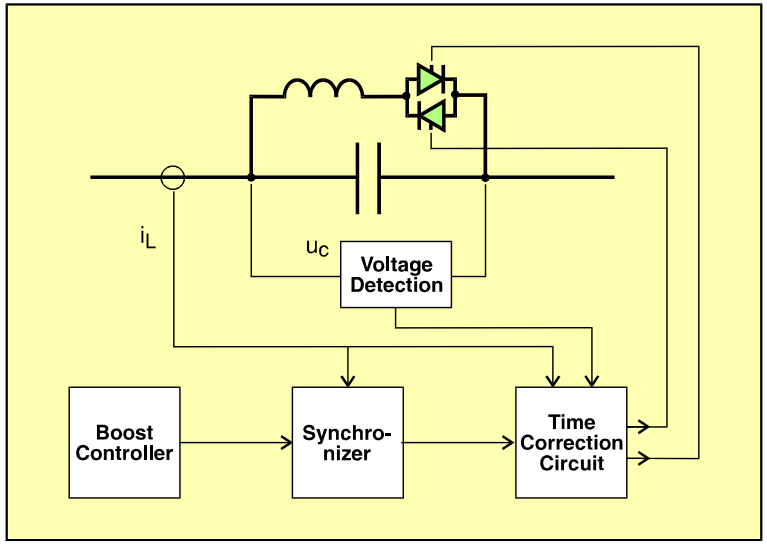

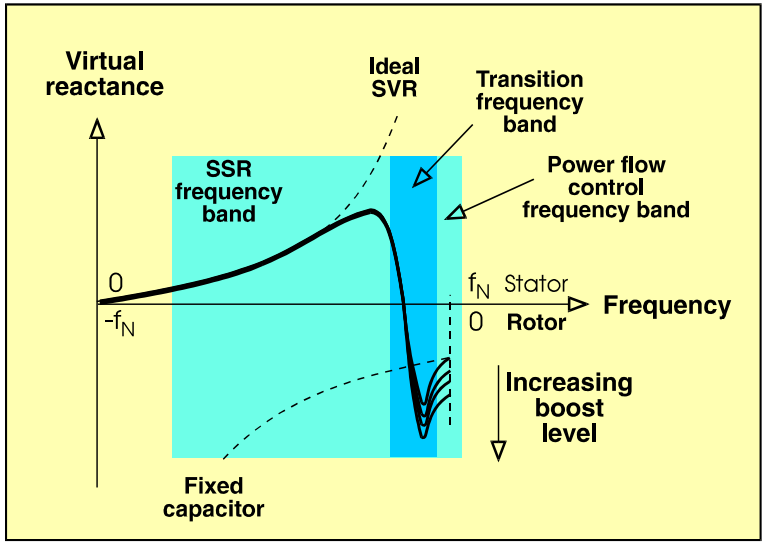

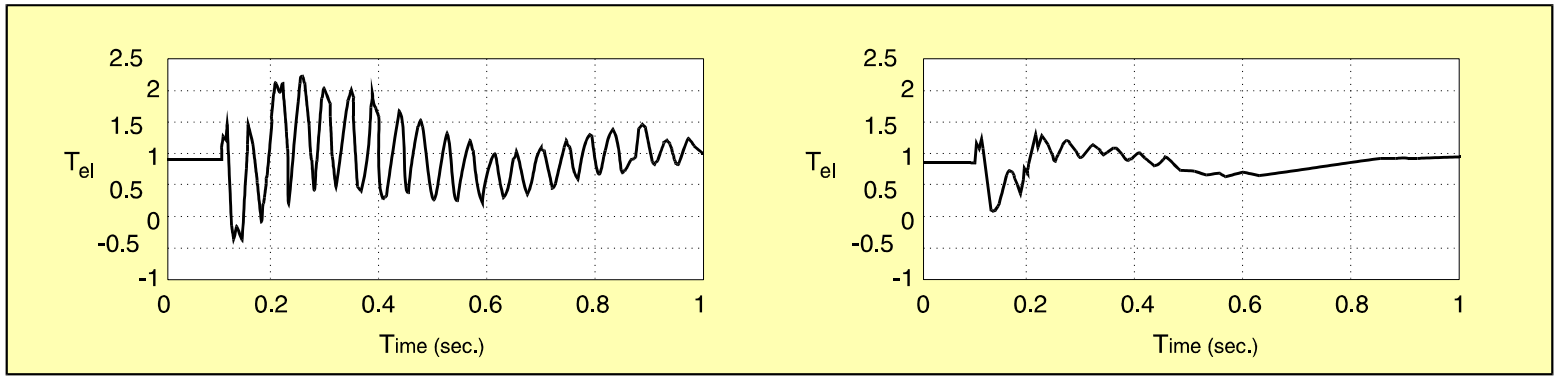

Increased Loading with Support - Remedial FACTS

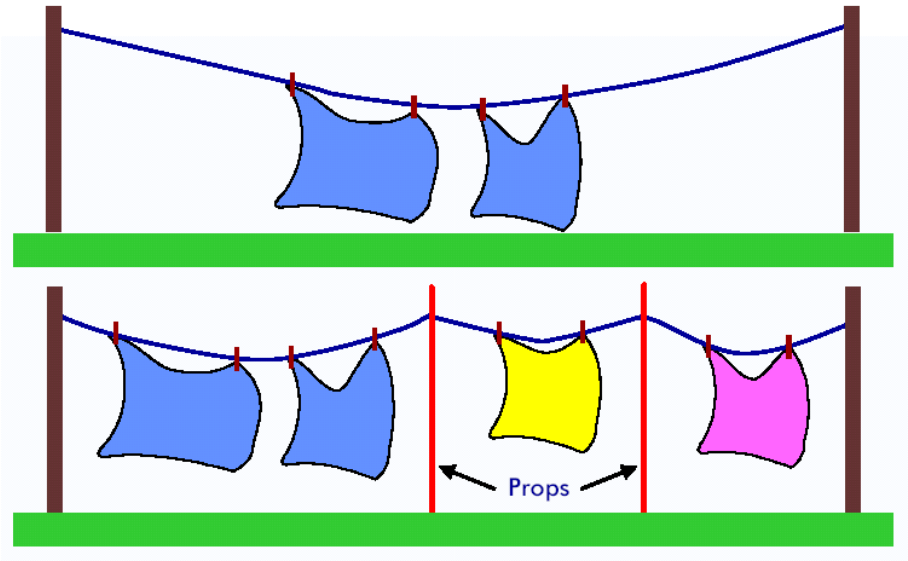

Increased Line Loading - Clothes Line Analogy

Improved Post-Contingency Voltage Profile due to Dynamic Reactive Support by SVC, STATCOM, SC

- **Elevation = voltage profile**
- **Amount of laundry = transmission loading**
- **Keep clothes off ground = stability criterion**
- **Distance above ground stability margin**
- **Main supports (brown) = on-line generators**
- **Props = intermediate reactive power compensation, e.g. SVC, STATCOM, SC**

Static Synchronous Series Compensator

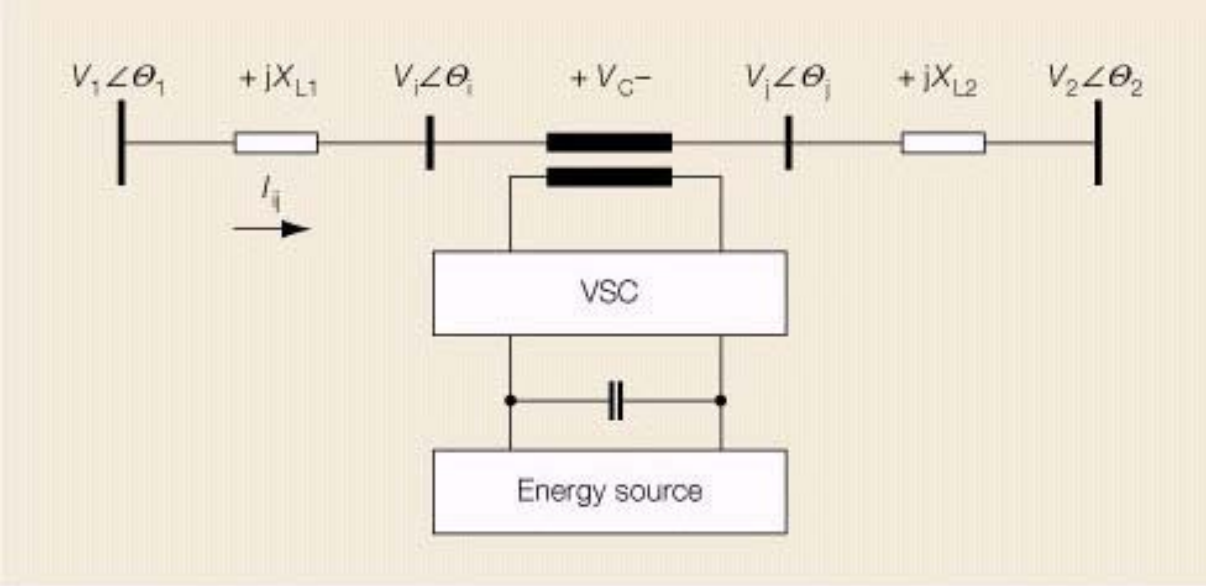

The basic configuration of a static synchronous series compensator (SSSC)

$+V_C-$ Voltage across SSSC series transformer

Other notation see Fig. 4

Unified Power Flow Controller - UPFC

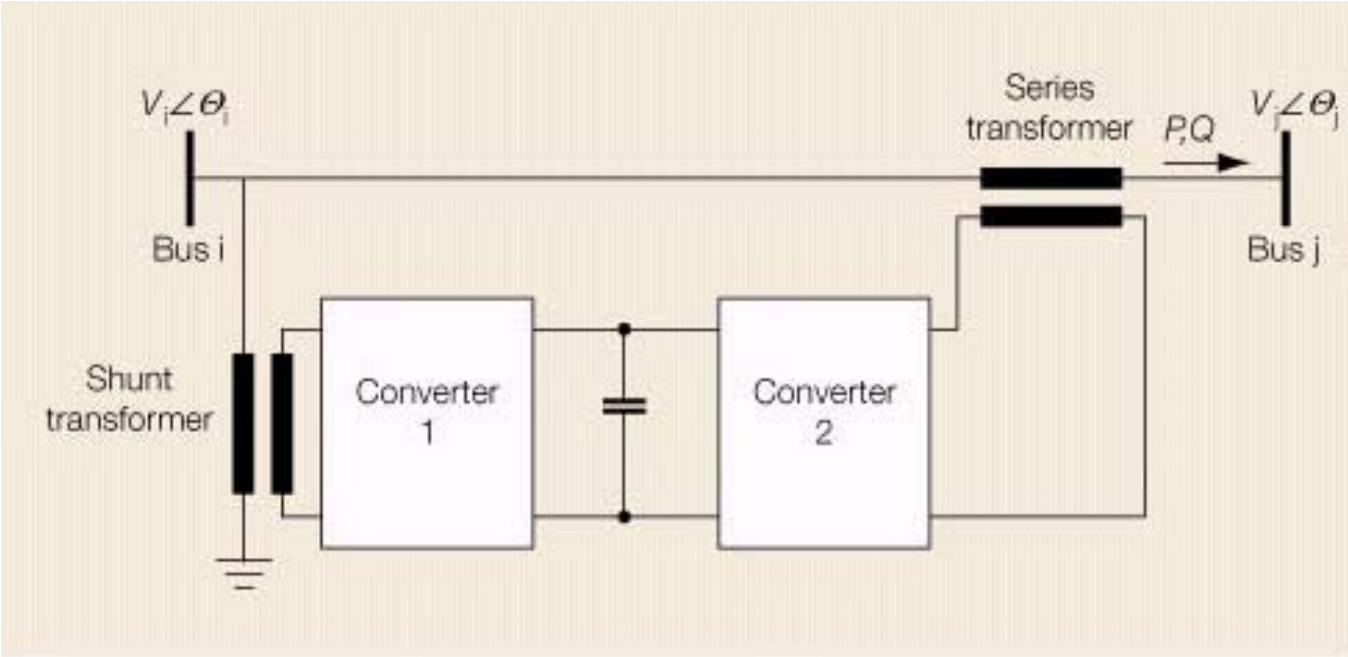

Basic circuit arrangement of the unified power flow controller (UPFC)

P Active line power
Q Reactive line power
$V_{i,j}$ Voltage magnitudes, buses i and j
$\Theta_{i,j}$ Voltage angles, buses i and j

DC Transmission Characteristics

Hyper-space bypass

- Controllable - power injected where needed
- Bypass congested circuits – no inadvertent flow
- Higher power, fewer lines, no intermediate S/S needed
- Two circuits on less expensive line
- No stability distance limitation
- Reactive power demand limited to terminals
- Narrower ROW
- Lower losses
- No limit to underground cable length
- Asynchronous

DC Transmission Technologies

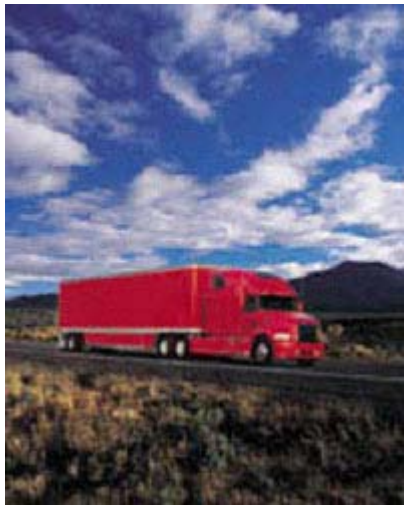

HVDC Classic for the Long Heavy Haul

- Power control
- Terminal reactive power demand by shunt bank switching
- Bulk power transmission
- Minimum system short circuit capacity > twice rated power (or > rated power with series compensation)

HVDC Light for the Intermediate Haul

- Real and Reactive Power control
- Dynamic voltage regulation
- Underground transmission
- Replace local inefficient generation
- Modular and expandable
- Black start capability
- No short circuit restriction

The HVDC Classic Converter Station

Converter station

Transmission line or cable

Smoothing reactor

Converter

AC bus

DC filter

Shunt capacitors or other reactive equipment

AC filters

Telecommunication

Control system

Reactive Power Supply

Power Ratings:

500 - 3000 MW

The CCC* Converter Station

*Capacitor-commutated converter station

Weaker Systems

Back-to-Back 100 - 550 MW

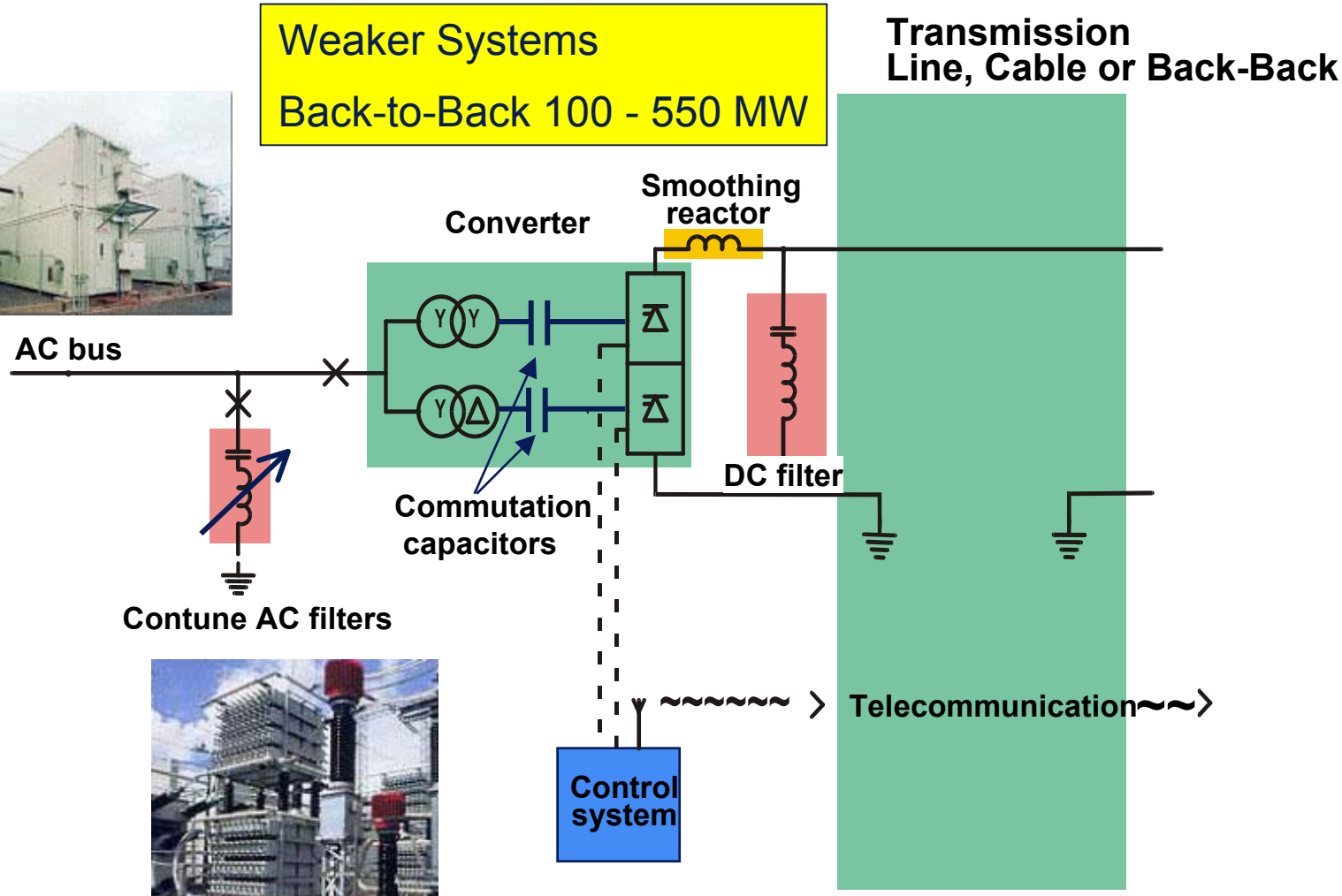

HVDC Light Station

Strong or Weak Systems
Dynamic Voltage Control
Underground Transmission
Up to ±150kV, 330MW

Converter station

Voltage Source(d) Converter - VSC

Phase Reactor

Transmission Cable

AC bus

AC filters

DC Capacitor

Control system

Dry DC Capacitor

IGBT Valves

Infinite Improbability Drive

VSC Operating Characteristics

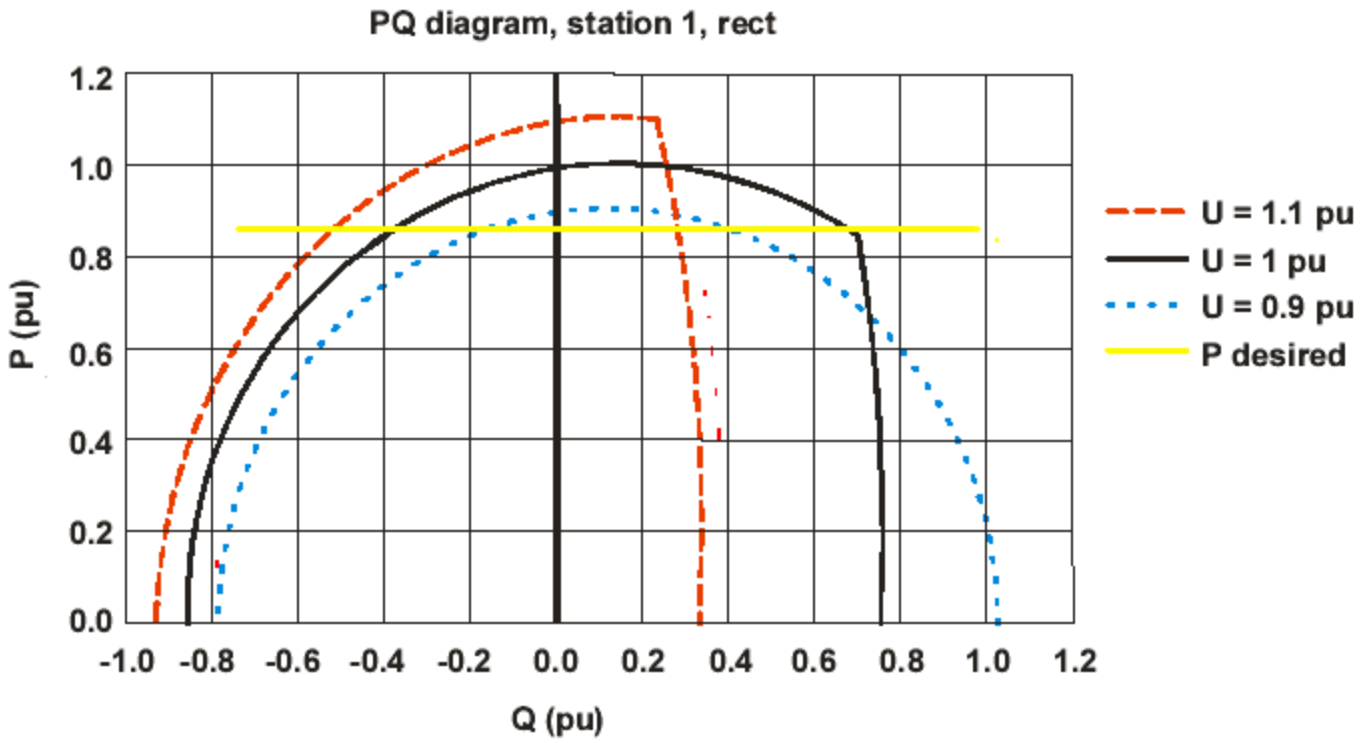

FACTS
Application Examples

Increased Interchange with FACTS

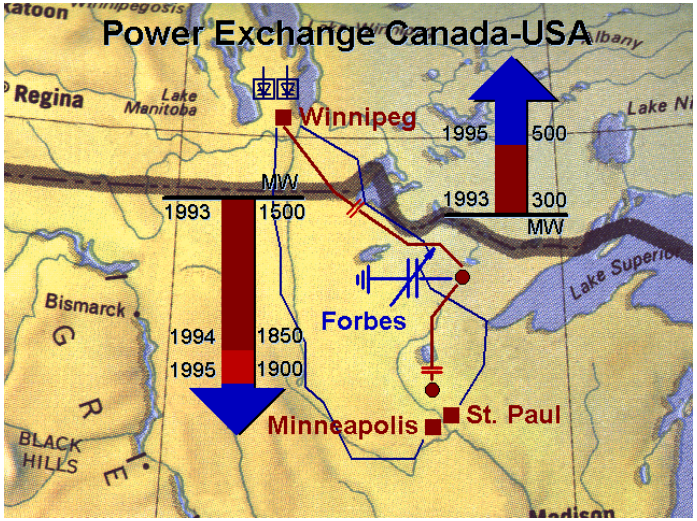

Forbes Static Var Compensator

- Increases interchange capacity
- Innovative dynamic overload
- -150 / 110 MVAR continuous range
- - 450 / 400 MVAR dynamic overload
- 2 x 300 MVAR 500 kV MSC
- Reduces LLP and OOS Tripping
- Single 500 kV line possible due to HVDC controllability

TCSC case - North/South Interconnection, Brazil

Location	Rating	Voltage
Maraba	348 Mvar SC	500 kV
Miracena	161 Mvar SC	500 kV
Colinas	2x161 Mvar SC	500 kV
Imperatriz	161 Mvar SC	500 kV
	107 Mvar TCSC	500 kV

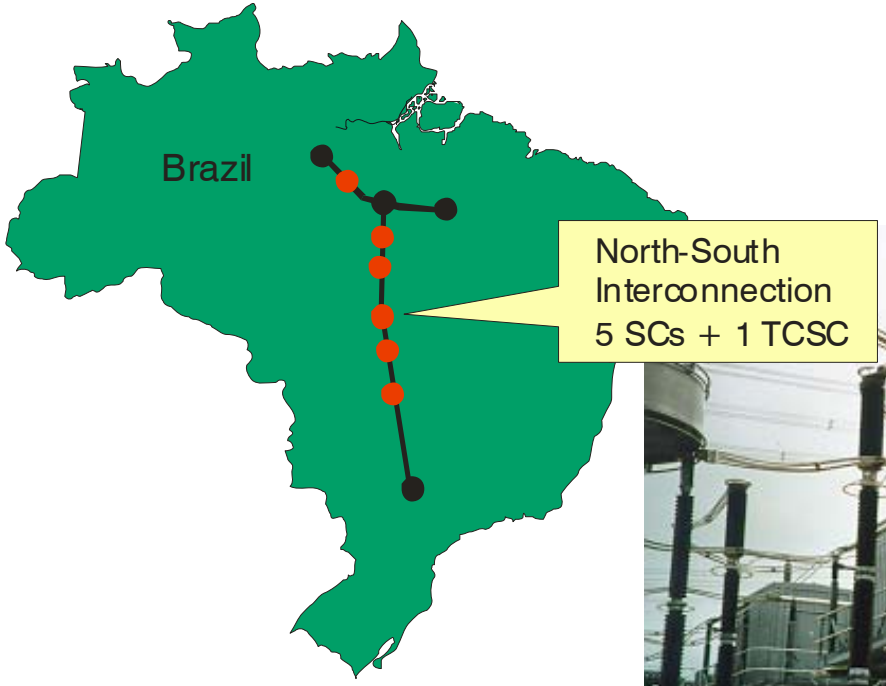

Power Oscillation Damping using TCSC

No TCSC POD active

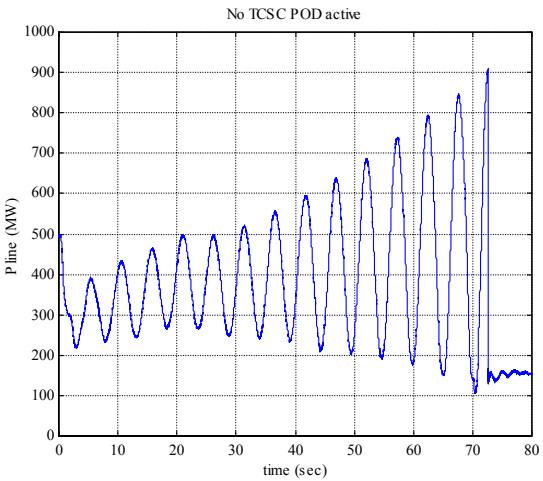

North TCSC POD active

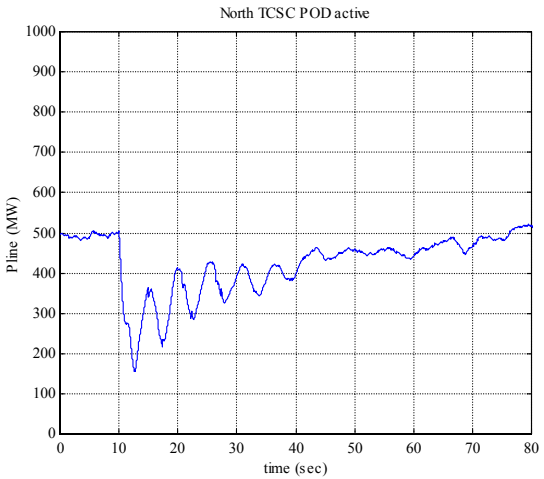

Both TCSC PODs active

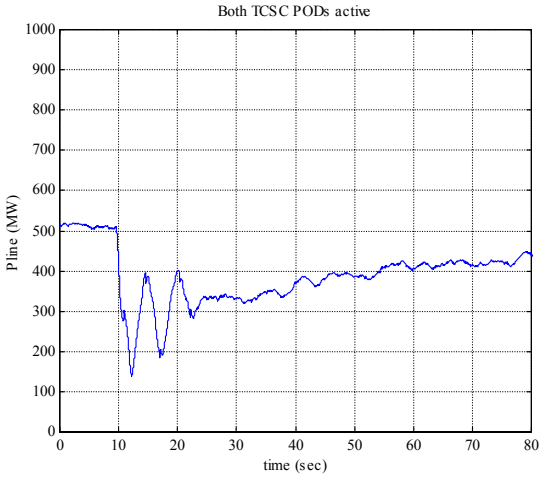

Eagle Pass, BtB Light® *Project sponsored by EPRI*

Application

- Voltage Support
- Power Transfer (BtB)

Alternatives

- Classic HVDC B-t-B combined with SVC

Challenges

- Short delivery time
- Small site

Solution

- BtB Light®, +/- 2x36 MVA

Foot print +/- 2x36 MVA: 90 x 120 ft

SVC Light® STATCOM for Industry, AvestaPolarit

Application

- Flicker mitigation (EAF Steel)

Alternatives

- New lines
- Conventional SVC

Challenges

- Short delivery time (14 month)
- Flicker reduction > 3 times
- High avaliability
- Small site (15 X 20 m)

Solution

- SVC Light® : 0/+164 Mvar

SVC Light® STATCOM for Industry

Recordings with & without SVC Light®, AvestaPolarit Stainless Steel, Finland

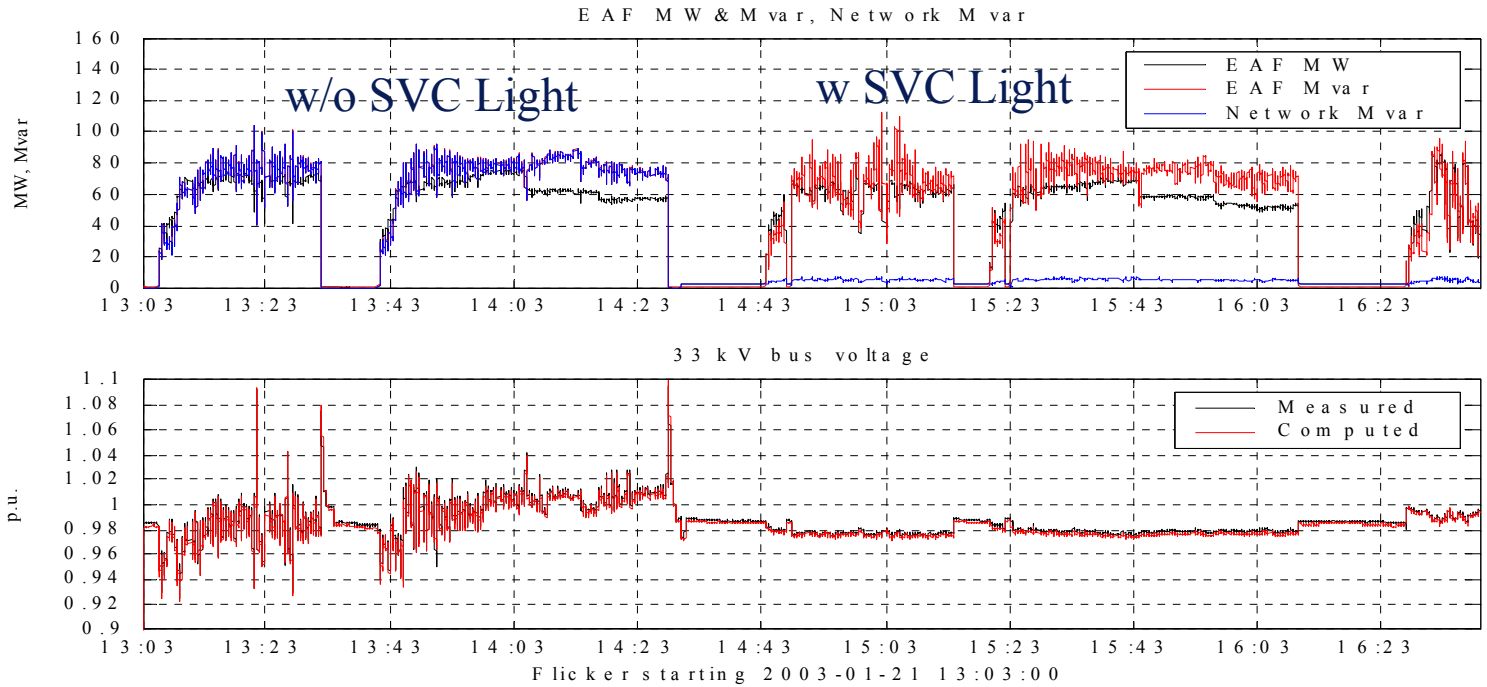

Recordings made during operation of EAF w and w/o SVC Light®
First EAF batch w/o SVC Light® (13:03-14:25)
Second EAF batch w SVC Light® (14:43-16:10)
Reduced flicker guaranteed to >3.0 – actual > 4.0

Holly STATCOM – SVC Light

Problem

- Old inefficient power plant in residential area
- Environmental concerns
- RMR generation needed for voltage support
- Small, congested site
- Audible noise

Solution

- ±100 MVAR STATCOM (SVC Light)
- 3 x 32 MVAR switched capacitor banks
- Compact design
- Variable rating “modular” solution

Benefits

- Allows retirement of old generating station
- Improves local environment
- Maintains reliable transmission service

PG&E Newark SVC

- **Application**
  - High load growth, increasing import
  - Vintage synchronous condensers used for voltage/ VAr Control
- **Alternatives**
  - Replace synchronous condensers
  - New generation/ transmission
  - FACTS: STATCOM or SVC
- **Challenges**
  - Short implementation time
  - High reliability requirement
  - Small footprint required, high seismic
- **Solution**
  - Fixed 225 MVAr Shunt Caps, 230 kV
  - Dyn. -100/+ 200 MVAr SVC FACTS, 230 kV with 10% capacitive overload

Cross Sound Cable – HVDC Light

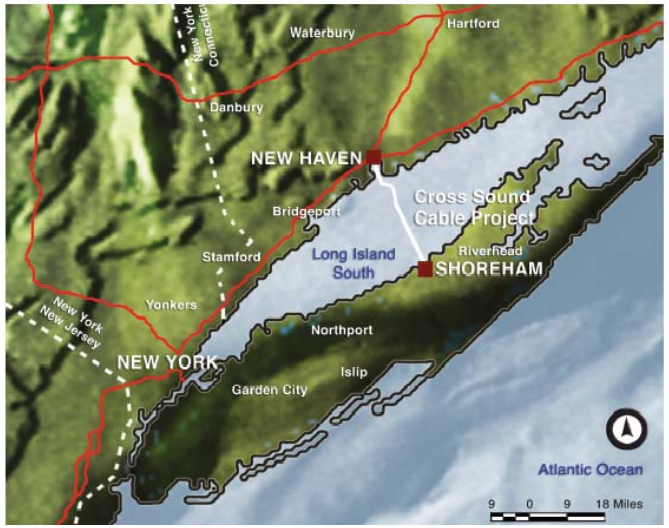

Problem

- Inadequate interconnection capacity to LI
- High location marginal pricing on LI
- Localized capacity shortages at peak
- High Load growth
- Plant siting difficulties
- All “roads” go through NYC

Solution

- 330MW, ±150kV HVDC Light Submarine Cable from New Haven, CT to Shoreham, NY
- Interconnects NEISO and NYISO
- Merchant Transmission
- Expandable Solution

Benefits

- Improves system reliability
- Relieves congestion - more economic dispatch
- Provides for emergency transfer, reserve sharing

Step Response Test

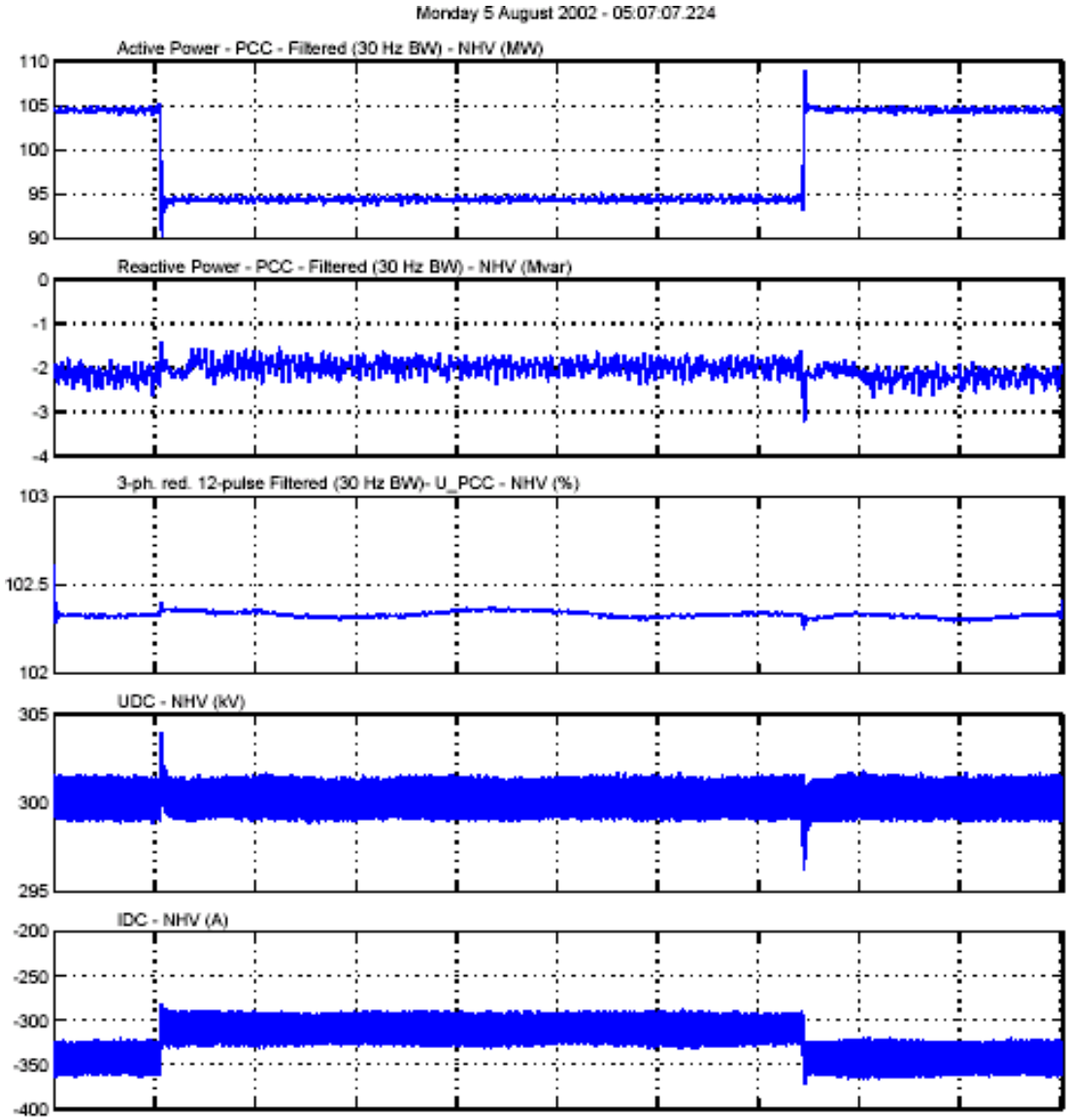

No Change in Reactive Power Demand or AC Voltage

Basin Electric Rapid City Tie – HVDC CCC

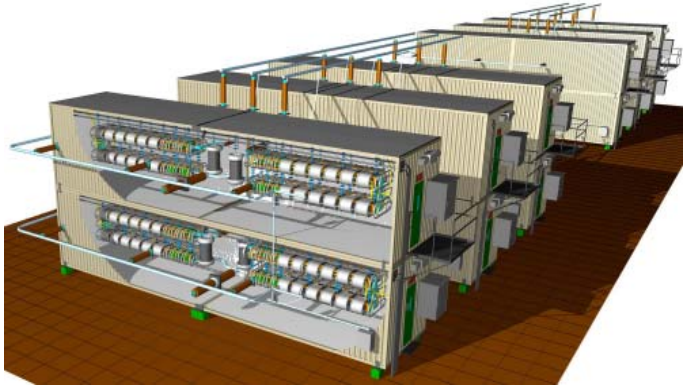

Problem

- Inadequate E-W transfer capacity
- High differential energy costs
- Localized capacity shortages
- Relatively weak ac networks
- Tight Schedule – 19 months

Solution

- 2x100MW modular Back-to-Back Tie
- Optimized aggressive schedule
- Capacitor Commutated Converters
- Expandable Solution

Benefits

- Solves problem with minimal ac system additions
- Relieves congestion - more economic dispatch
- Provides for emergency transfer, reserve sharing

Sylmar Replacement – HVDC Classic

Existing Sylmar West
2000MW - circa ’69,’84

Sylmar East with
Replacement Converters
~~1100MW~~ circa ’89 -> 3100MW

Problem

- Unreliable, aging, obsolete equipment
- Environmentally unfriendly Hg-Arc Valves
- Expensive O&M, contamination
- Seismic vulnerability

Solution

- Replace vintage equipment with 3100MW, ±500kV bipole housed in 1/3 the space
- Elimination of Hg-Arc Valves & auxiliaries
- Reuse existing filtering and switchgear
- Replace control & protection system

Benefits

- Dramatic reduction in area, complexity and O&M
- Meets current seismic requirements
- More reliable & dependable power transfer

Better Asset Utilization Through Technology

Conventional HVAC

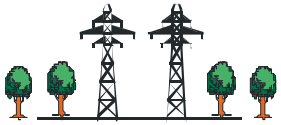

HVAC with RPC / FACTS

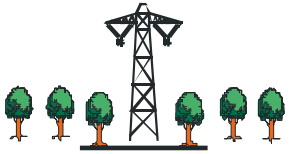

HVDC

DC & AC

- Adequate incentives
- Fast track permiting
- Regional planning
- Multiple solutions

Restaurant at the End of the Universe . . . Menu

FACTS
(Flexible AC Transmission System)

Static Var Compensator
Avoid voltage collapse
(Biggie size available, extra value-meal)

SVC Light, a.k.a. STATCOM
For flicker mitigation, dynamic voltage control
(Recommended for the light eater, "yuppie fare")

Series Capacitor
Try this to carry heavier loads over longer distances!

Thyristor Controlled Series Capacitor
Damps infinite improbability drive oscillations

HVDC
(High Voltage Direct Current)

HVDC Classic
Hyper-space bypass for the long, heavy haul
(Man-size portions, multi-terminal available)

HVDC Light, a.k.a. VSC Transmission
A favorite on the edge of the galaxy
(For smaller appetites, stealthy and healthy)

Capacitor Commutated Converter
Added zest for the traditional favorite
(Portions for 2, strengthen your back-to-back relationship)

DRINKS

Pan-Galactic Garble Blaster
A real knock-out punch!
(Warning – the 2nd one will kill you.)

Pulse-Width Modulator
Only served with SVC Light & HVDC Light
(Shaken – not stirred, Marvin's favorite refreshment!)

Dinner and a Movie . . .

ABB