Oktober 2005

300 MW
umrichtergespeister drehzahlvariabler Antrieb für das Pumpspeicherkraftwerk Goldisthal

Aurélie Bocquel

Goldisthal

Content

- Topology of pump storage station and converter
- Control and operation modes (measurement results)
- New topology to meet the requirements at grid failure

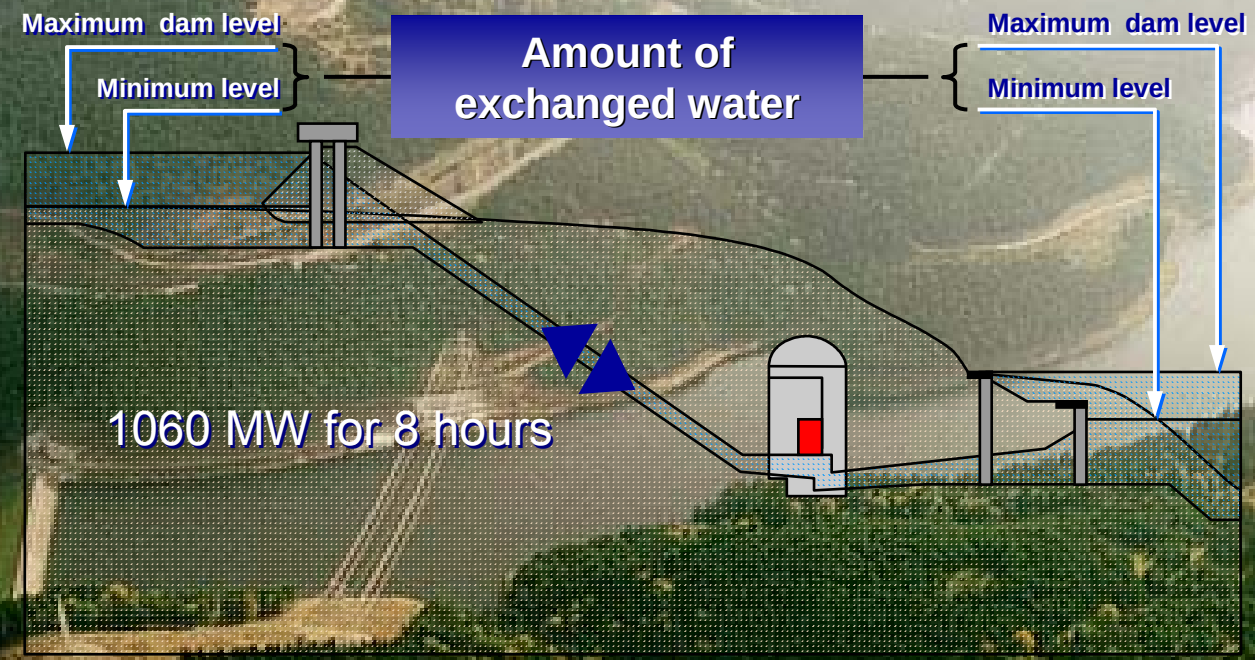

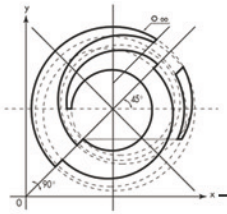

300 MW umrichtergespeister drehzahlvariabler Antrieb für das Pumpspeicherkraftwerk Goldisthal

ALSTOM

Major benefits of the cyclo-converter driven doubly-fed induction machines

(one of the biggest cyclo-converters in the world)

- Speed optimisation at partial loads
  - High efficiency
- Only 30 % of total power fed by the converter
  - Reduced converter losses
- High dynamic power control
  - Grid stabilisation

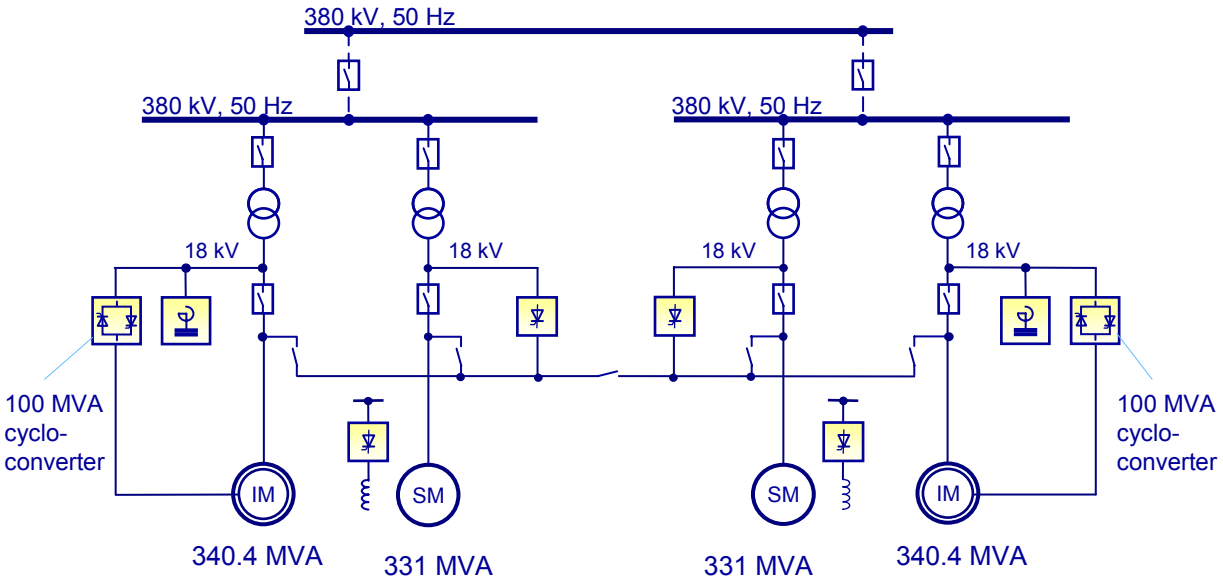

Single-line diagram of Goldisthal pump-storage station

Machine cavern Goldisthal

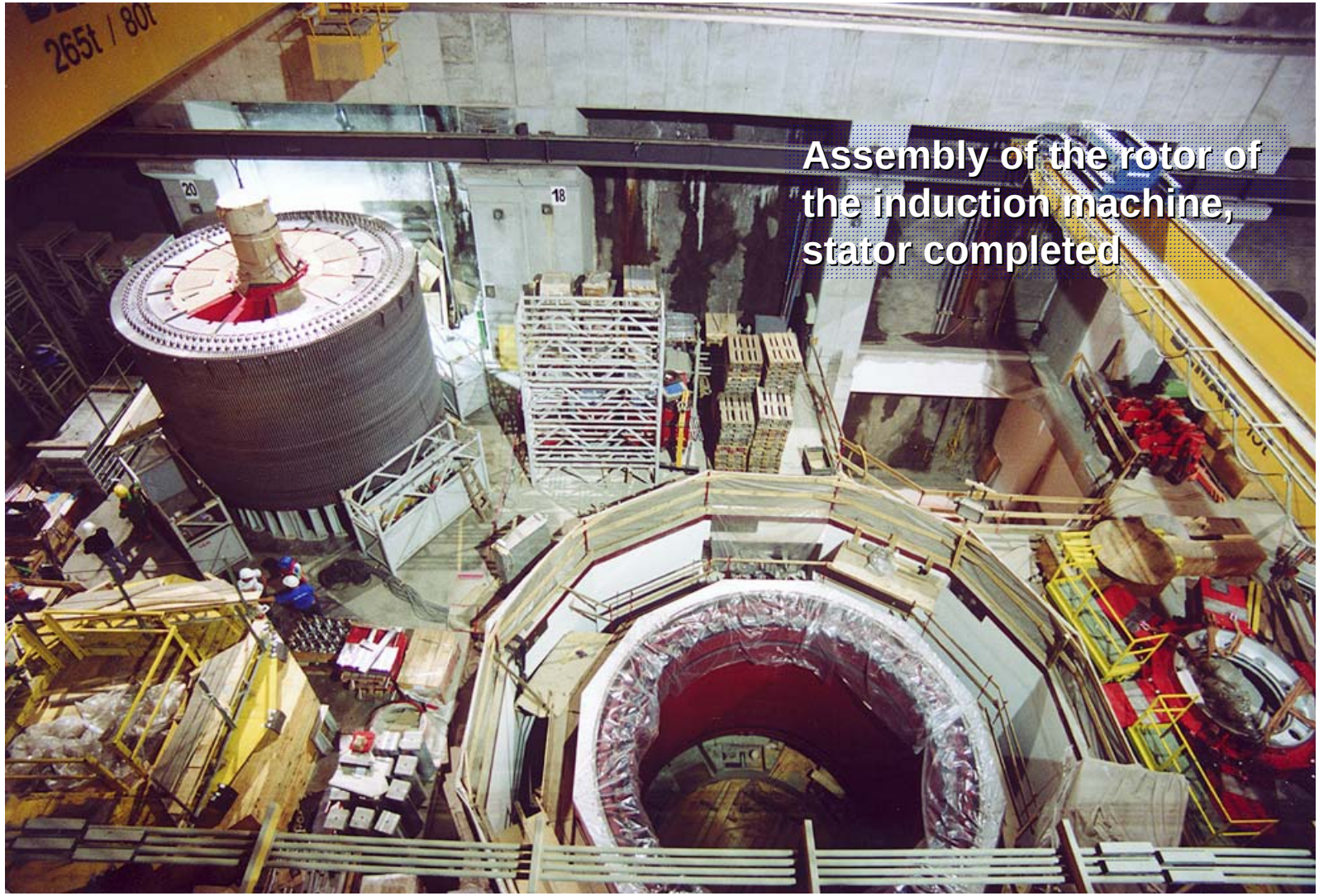

Assembly of the rotor of the induction machine, stator completed

Cyclo-converter topology

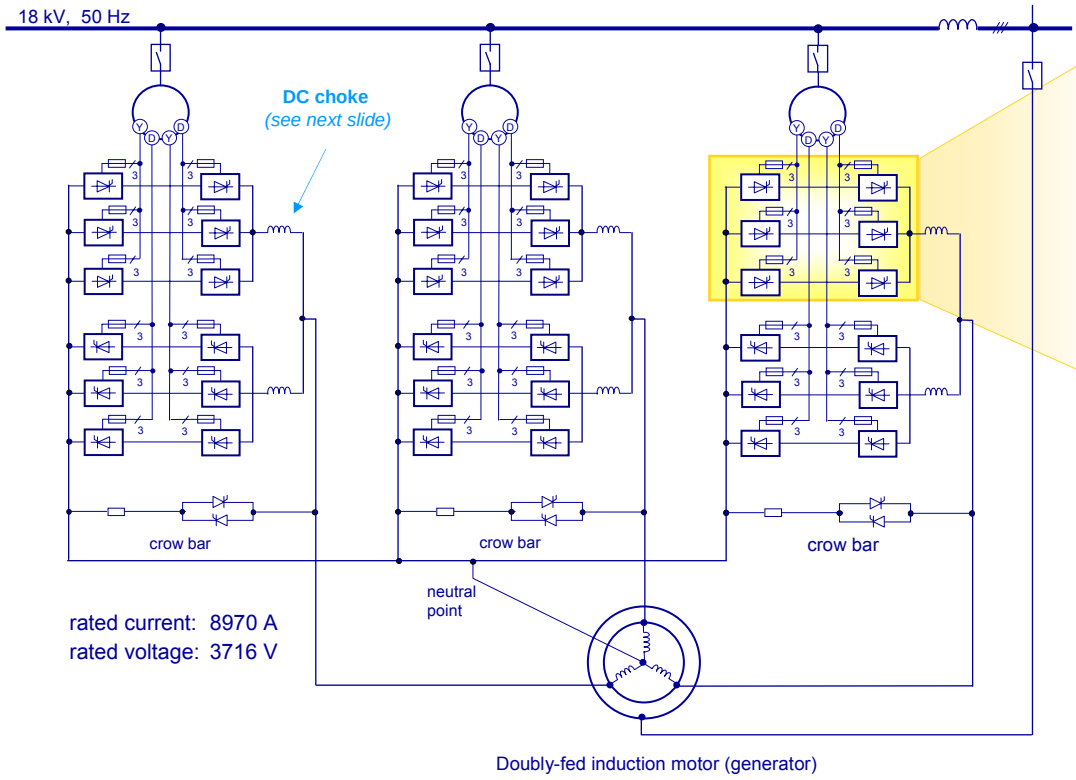

Cubicle carrying three independent 12 pulse thyristor bridges
(width/depth/height in mm: 3400 / 1400 / 2400)

100 MVA cyclo-converter for the doubly-fed induction machine

- 2 anti-parallel 12 pulse thyristor bridges per rotor phase
- Circulating currents
- 3 parallel bridges
  (1 for redundancy)
- Crow bars for protection

DC chokes

The DC chokes carrying the circulating current improve the protection of the converter

Rated current: 6365 A

Power flow at constant torque

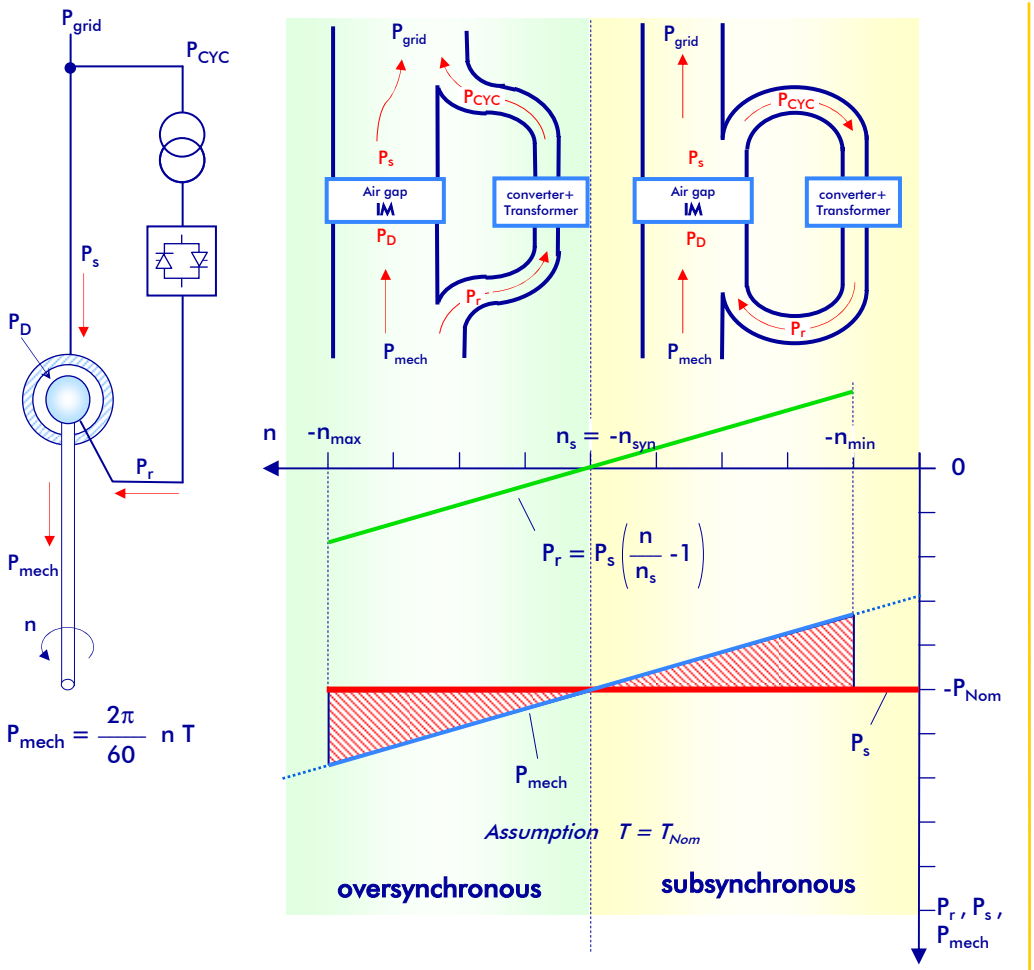

Turbine operation

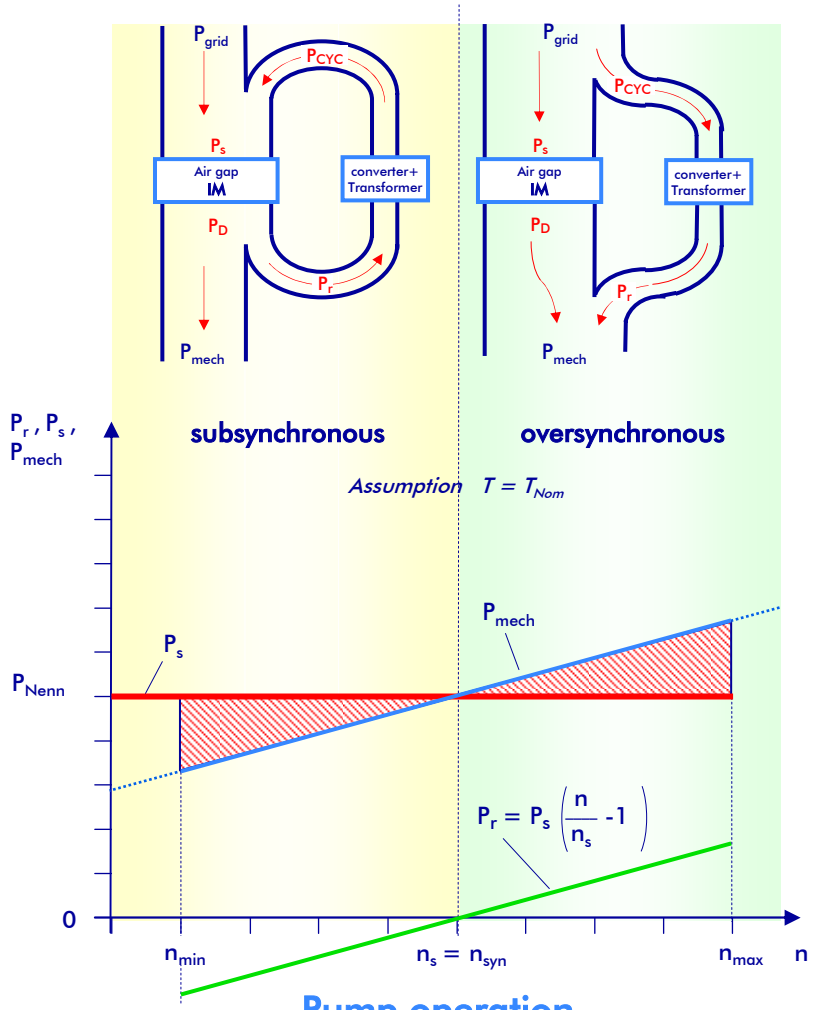

Pump operation

Control structure of the doubly-fed induction machine with cyclo-converter

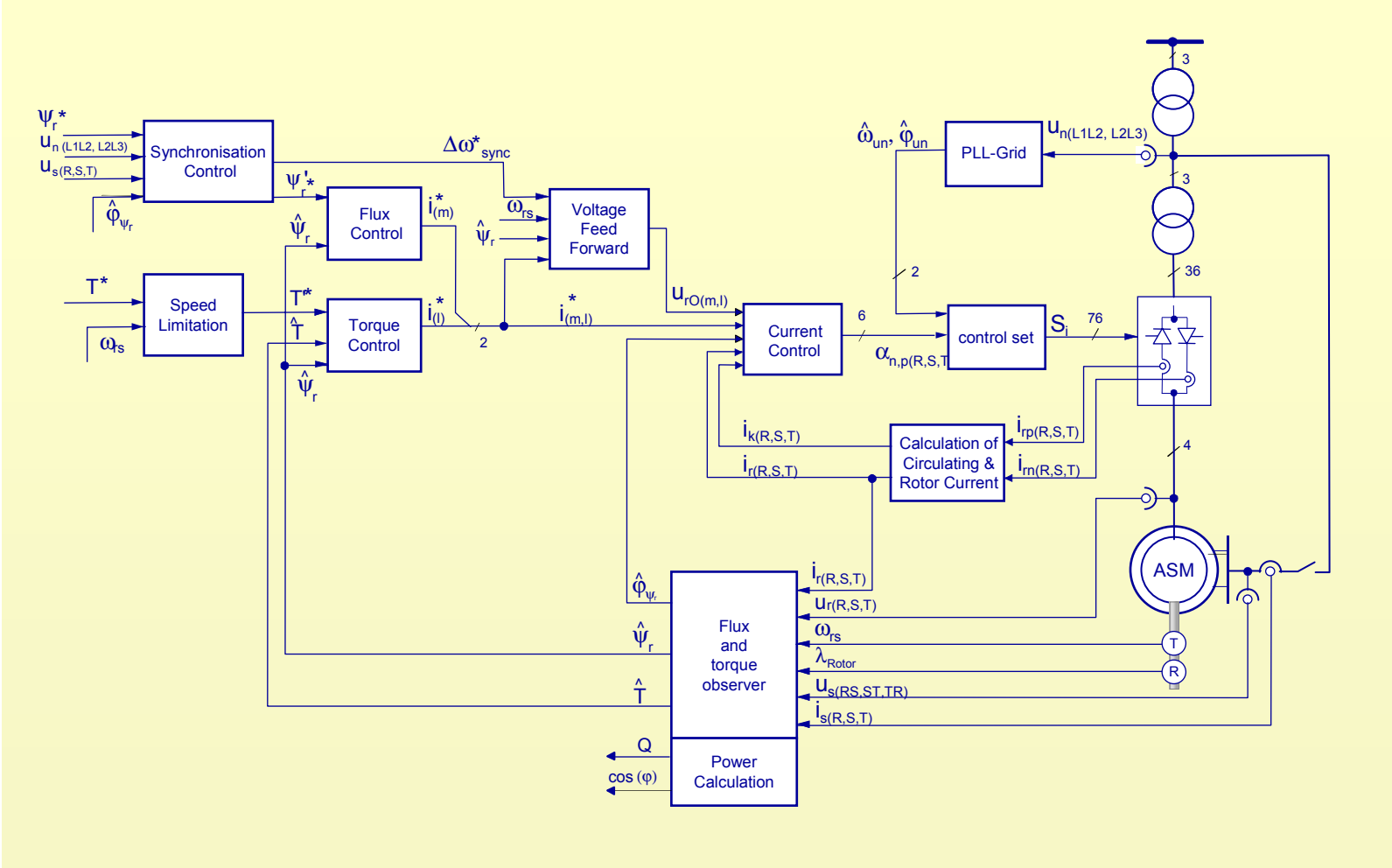

Torque steps - simulation and measurement

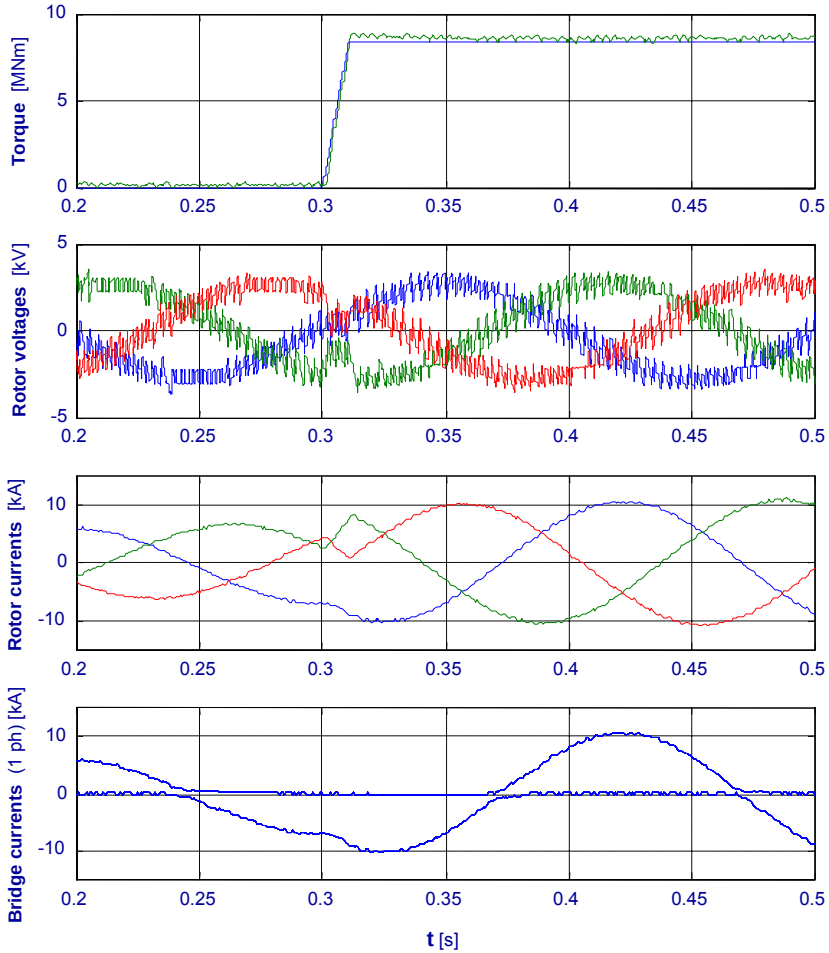

Simulation of a torque step from zero to rated torque

Reachable step response time:
10 ms

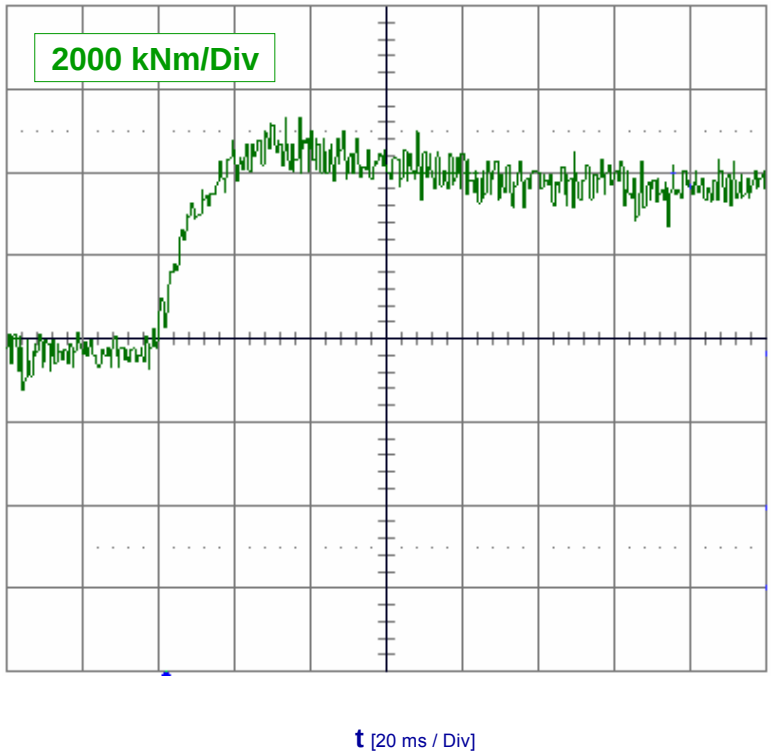

Measurement of a torque step on site
(about 40% of rated torque)

Power control of induction machine at water pressure variation
(300 MW of synchronous machine taken out of operation)

- Delivered power kept constant by changing the speed of the turbine

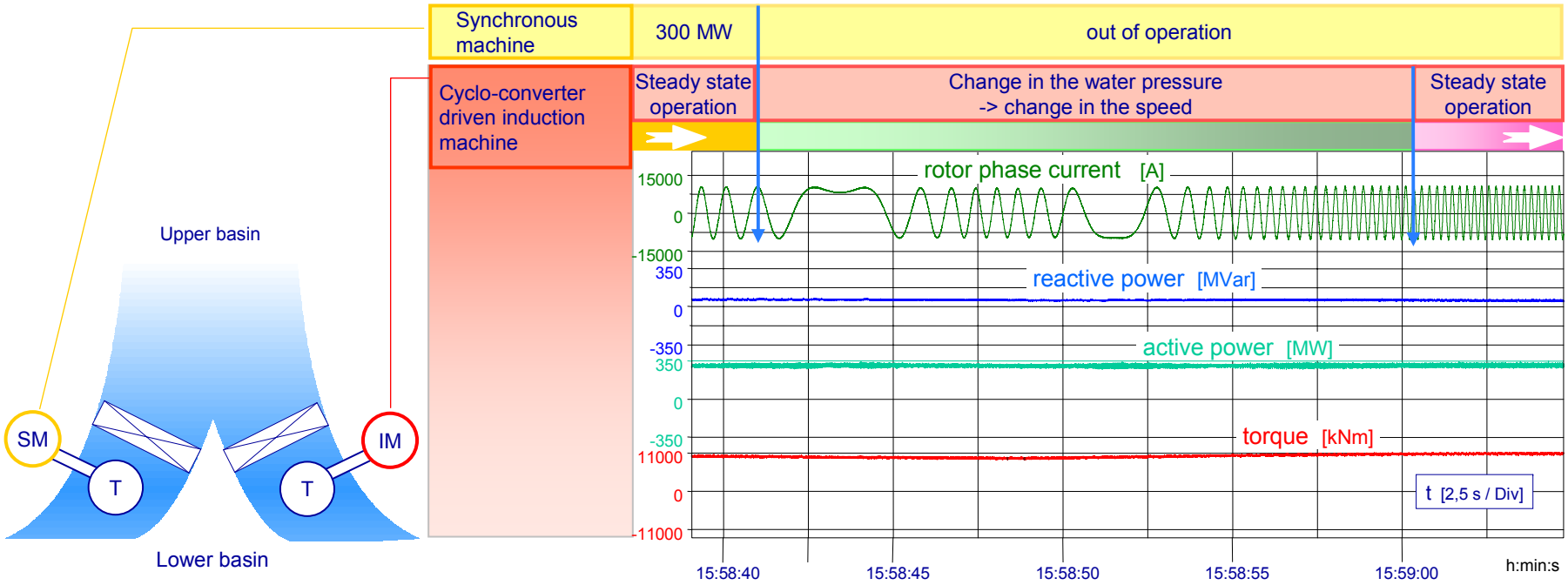

One inlet water pipe per pair of turbines

Measurements of the induction machine

New topology to drive through grid failure

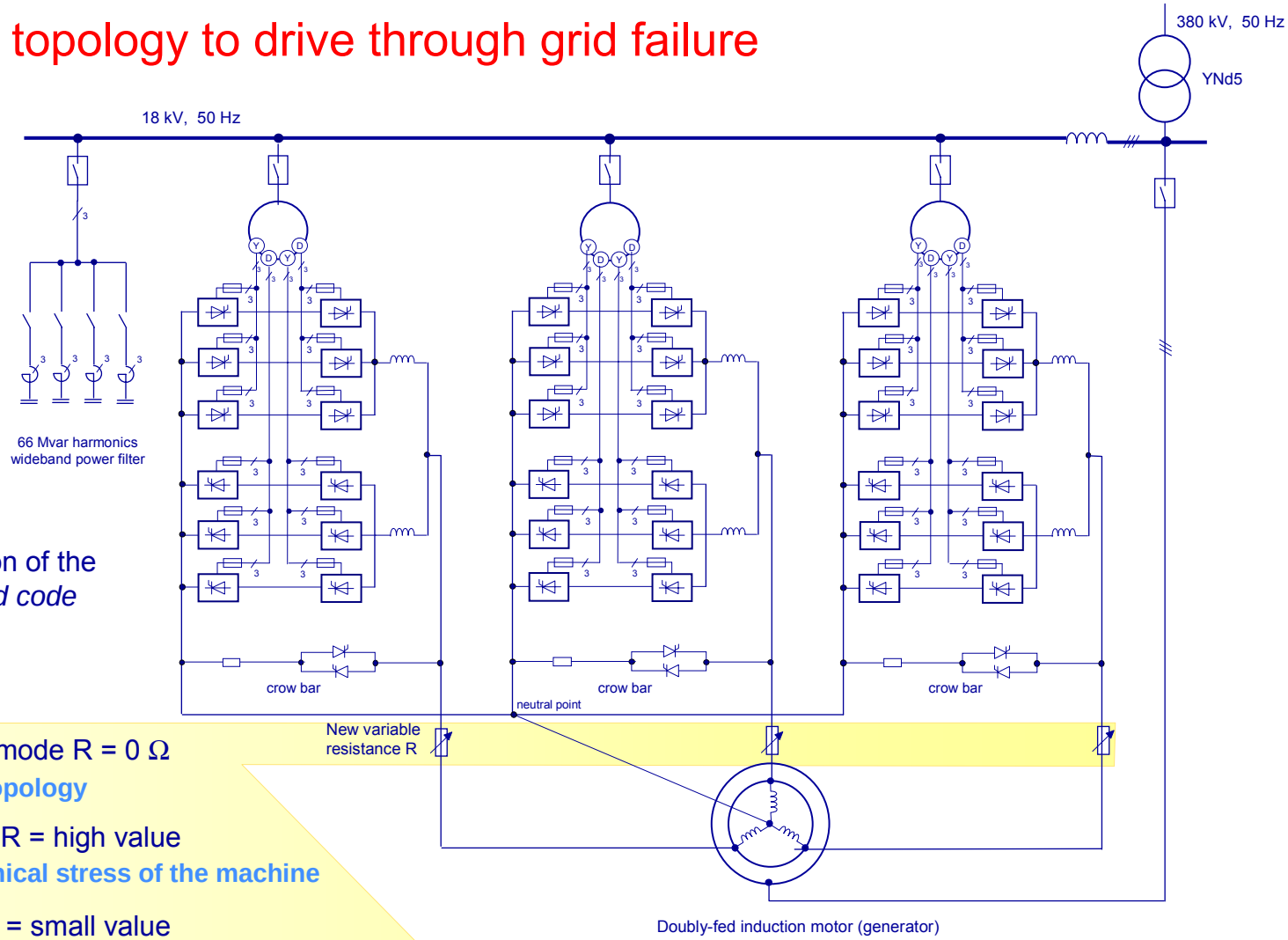

Requirements:

- No major interruption of the power delivery *(grid code requirement)*
- Protection assured

Normal operation mode R = 0 Ω
same as actual topology

During grid failure R = high value
limits the mechanical stress of the machine

After grid failure R = small value
maintains the drive in its speed range of operation

New topology - Single phase short circuit

Cycloconverter	In operation	Pulses off			In operation
R	0 Ω	1 Ω	0.08 Ω		0 Ω
Crow bar	off	triggered		switched off	
Event	Steady state, generator mode	rid fail.	Faulty phase disconnected	Faulty phase reconnected	Steady state, generator mode

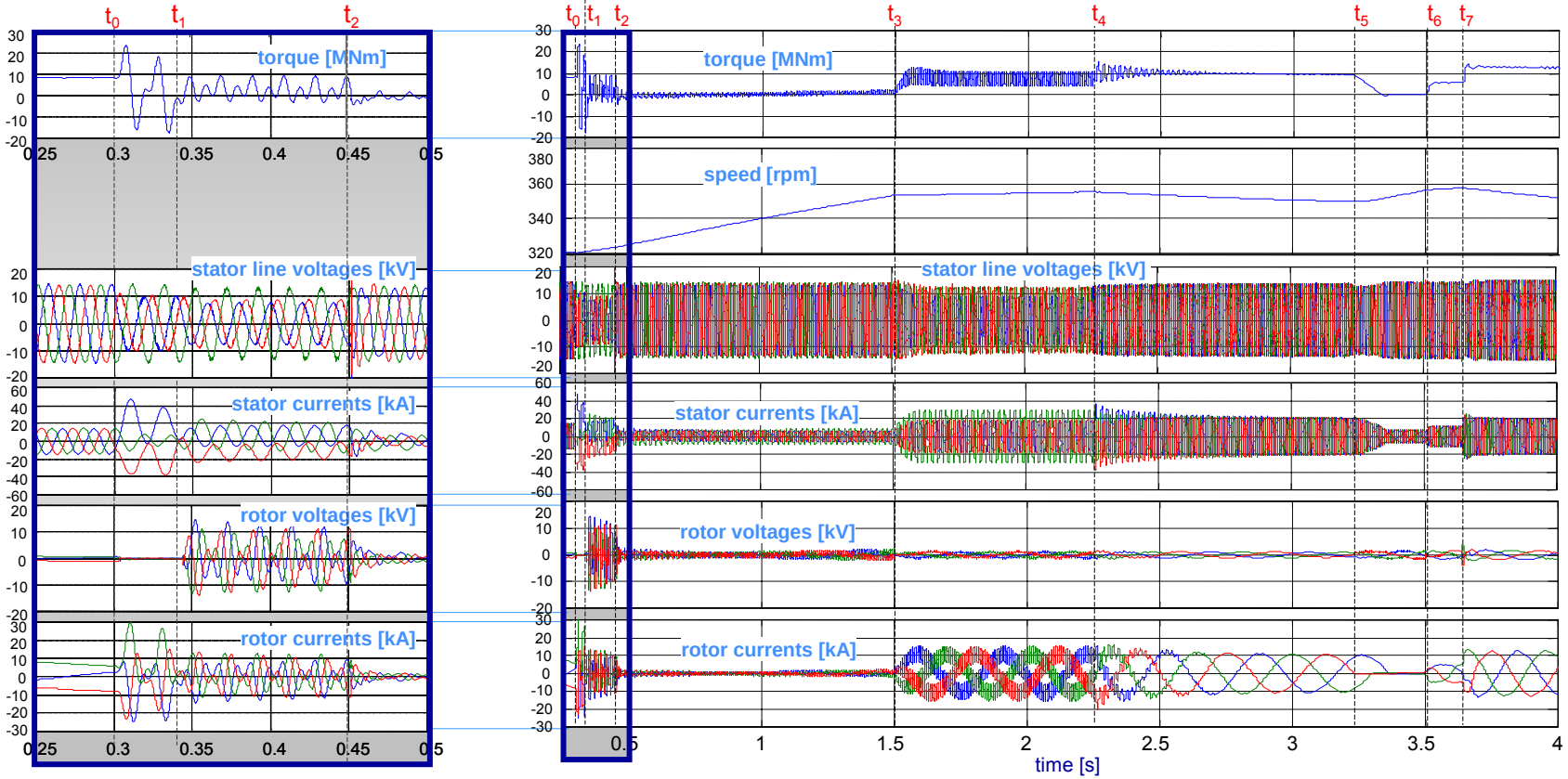

Simulation of a single phase short circuit
(150 ms, following interruption of the faulty phase)

Conclusion

300 MVA doubly-fed cyclo-converter driven induction machine works advantageously in the Pump Storage Plant Goldisthal:

- High efficiency
- Power on demand
- Stabilisation of the grid

Drive can ride through grid failures with new concept (additional variable resistor):

- No major interruption of the power delivery
  (circuit breakers remain closed)
- Increased availability
  (restart not necessary)

Shaft between the induction machine and the turbine

ALSTOM

www.alstom.com

Conclusion

Advantages of the cyclo-converter driven induction machine drive compared to a synchronous machine drive

	Cyclo-converter driven induction machine	Synchronous machine with standard excitement
Step response time (P, Q) (zero to rated)	150 ms *)	several seconds
Synchronisation time	10 s	20 s or more depending on mechanical load conditions
Synchronisation transient reactions	damped after 500 ms	damped after several seconds
Average efficiency of the whole storage unit (turbine + drive)	80 %	70 %

*) response time of the cyclo-converter control 10 ms

Machine cavern Goldisthal - different phases of the construction

Conclusion

- 300 MVA doubly-fed cyclo-converter driven induction machine successfully commissioned
- High efficiency due to speed optimisation at partial loads and doubly-fed design
  (only 30 % of total power fed by converter)
- Stabilisation of the grid due to high-dynamic flux oriented control
  (torque step response time <10 ms)
- Application of drive system beneficial also for pump-storage stations with less power
  (e.g. 50 to 100 MVA).

Shaft between the induction machine and the turbine

Requirements at grid failures and constraints of the topology

General requirements :

- No major interruption of the power delivery *(grid code requirement)*
  - → closed stator circuit breaker
  - → drive maintained in the operation speed range
- Protection assured
  - → limited mechanical stress of the machine

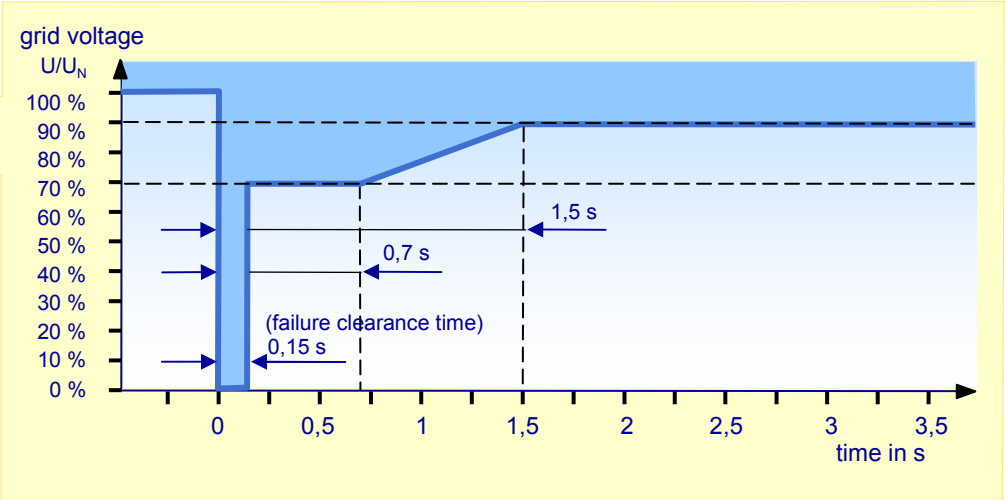

Constraints of the actual topology:

- Converter currents not surely switched off (not self commutated)
  - → circuit breakers are switched off
  - → restart after grid failure neccessary
  - → reduction of the availability

Grid voltage limits at the grid connection point
(short circuit near to the generator)
(Vattenfall Europe Transmission grid code)

New topology to drive through grid failure

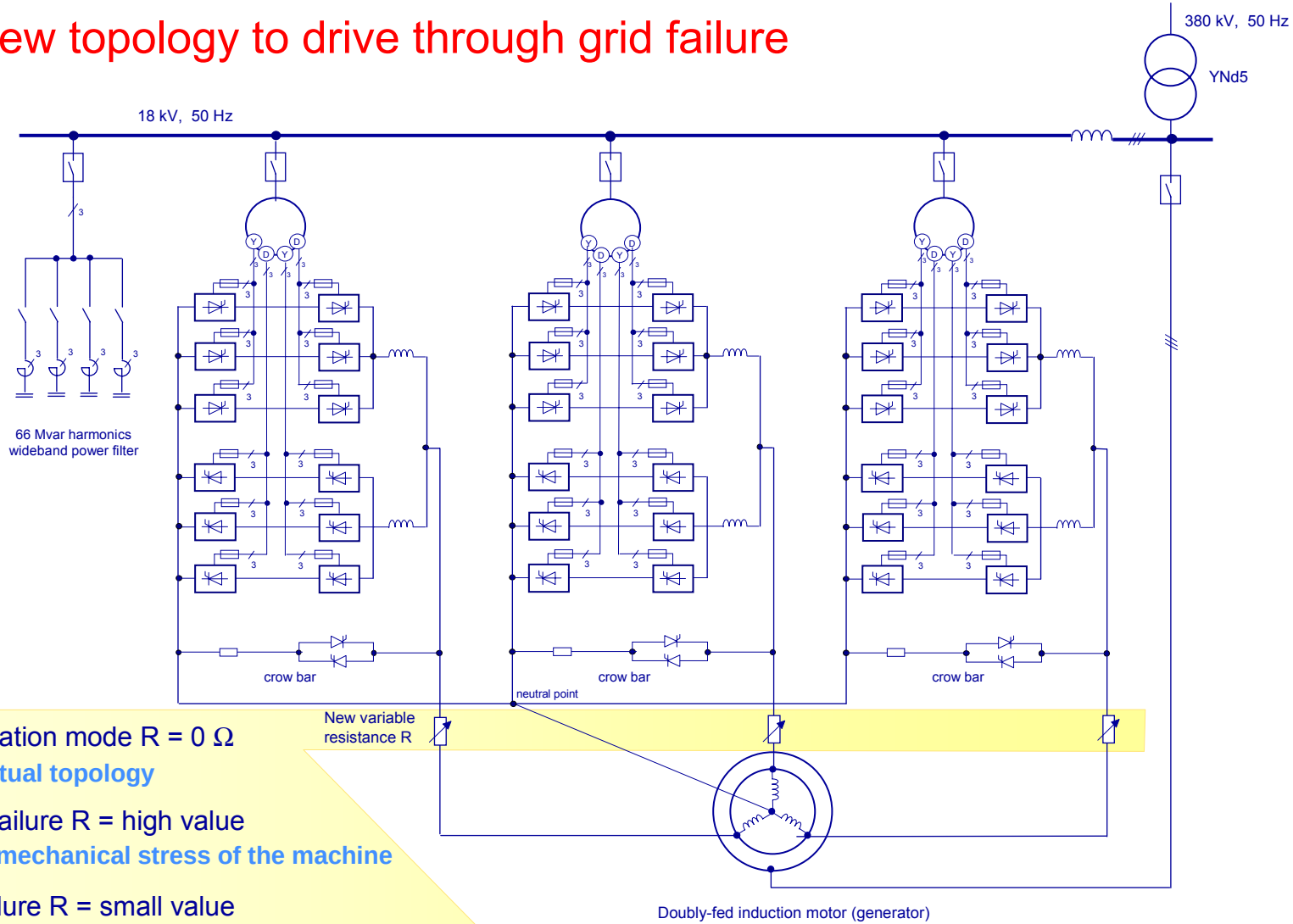

- Normal operation mode R = 0 Ω
  - **same as actual topology**
- During grid failure R = high value
  - **limites the mechanical stress of the machine**
- After grid failure R = small value
  - **maintains the drive in its speed range of operation**

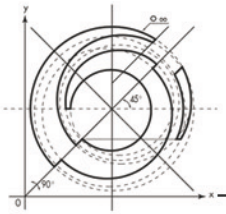

Analysis of a 300 MW Variable Speed Drive for Pump Storage Plant Applications

ALSTOM

Actual topology - Voltage dip (50%) without switching off the circuit breakers

Result:

- No major interruption of the power delivery

but

- too high machine currents
- too high mechanical stress of the machine
- drive leaves operating speed range

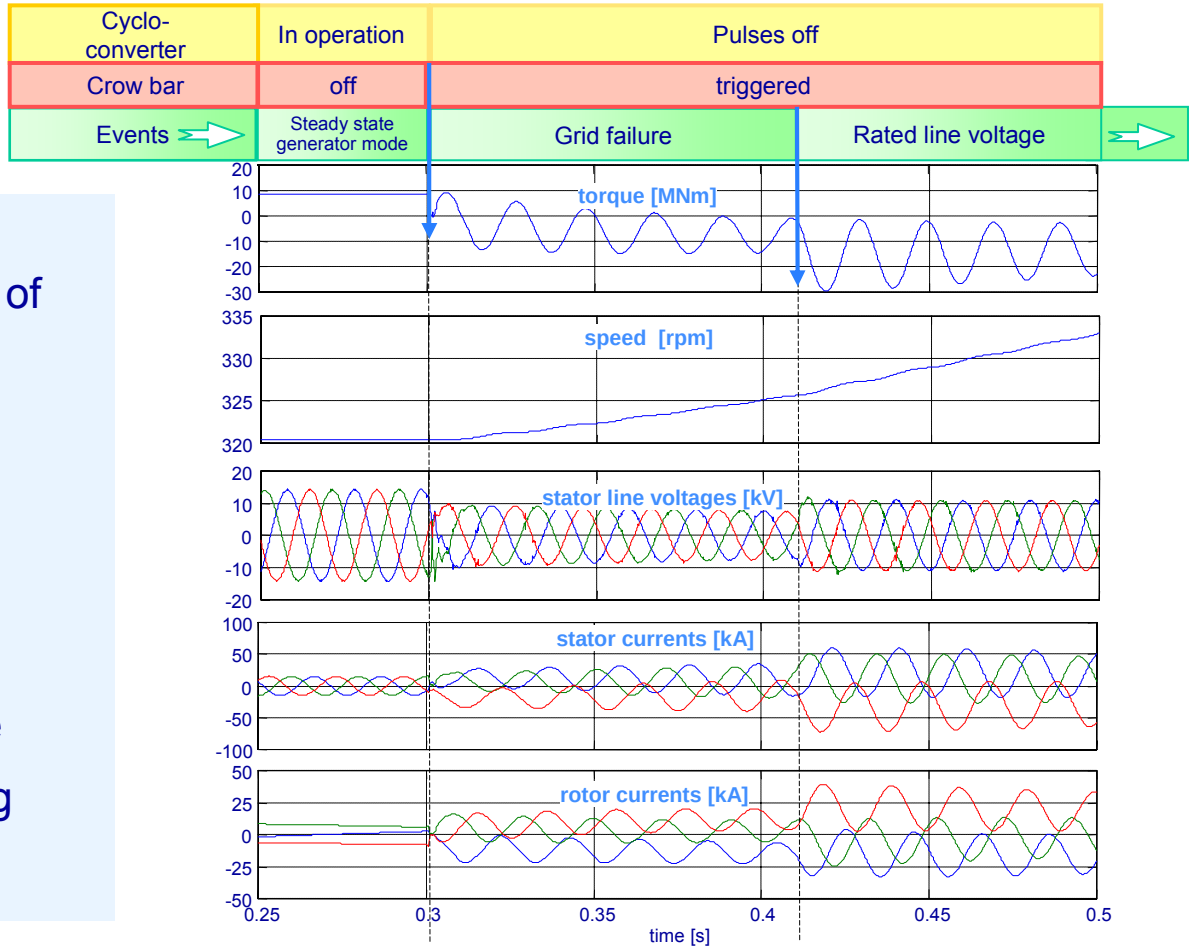

Simulation of a voltage dip (110 ms, 50 % of nominal voltage)

300 MW Variable Speed Drives for Pump-Storage Plant Application Goldisthal

Simulation of a speed variation at constant torque in pump operation

- At steady state operation the rotor flux amplitude and the magnetising current of the stator are constant.
- With constant torque, the rotor current amplitude is constant and independent of the slip of the machine
- The rotor voltage amplitude varies linearly with the angular velocity of the rotor flux vector related to the rotor angle.

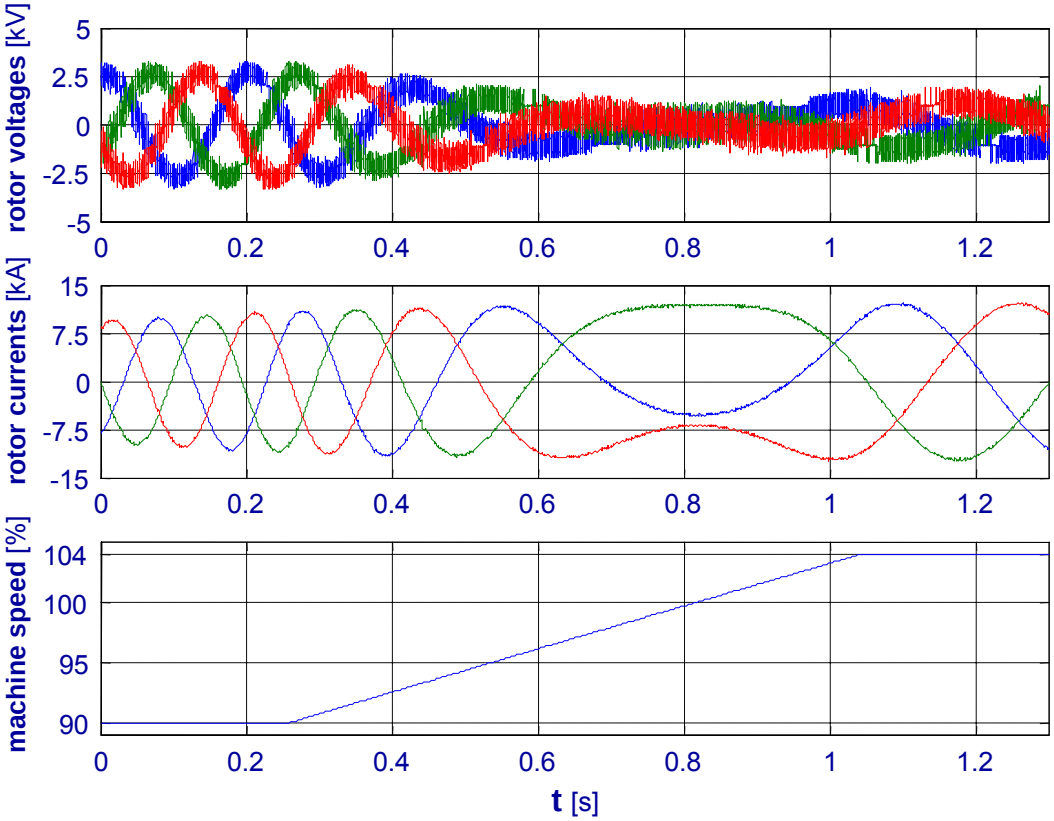

Connection to the grid at 95 % of the rated speed

Reduced start-up time:

- Synchronisation below the synchronous speed
- Fast synchronisation

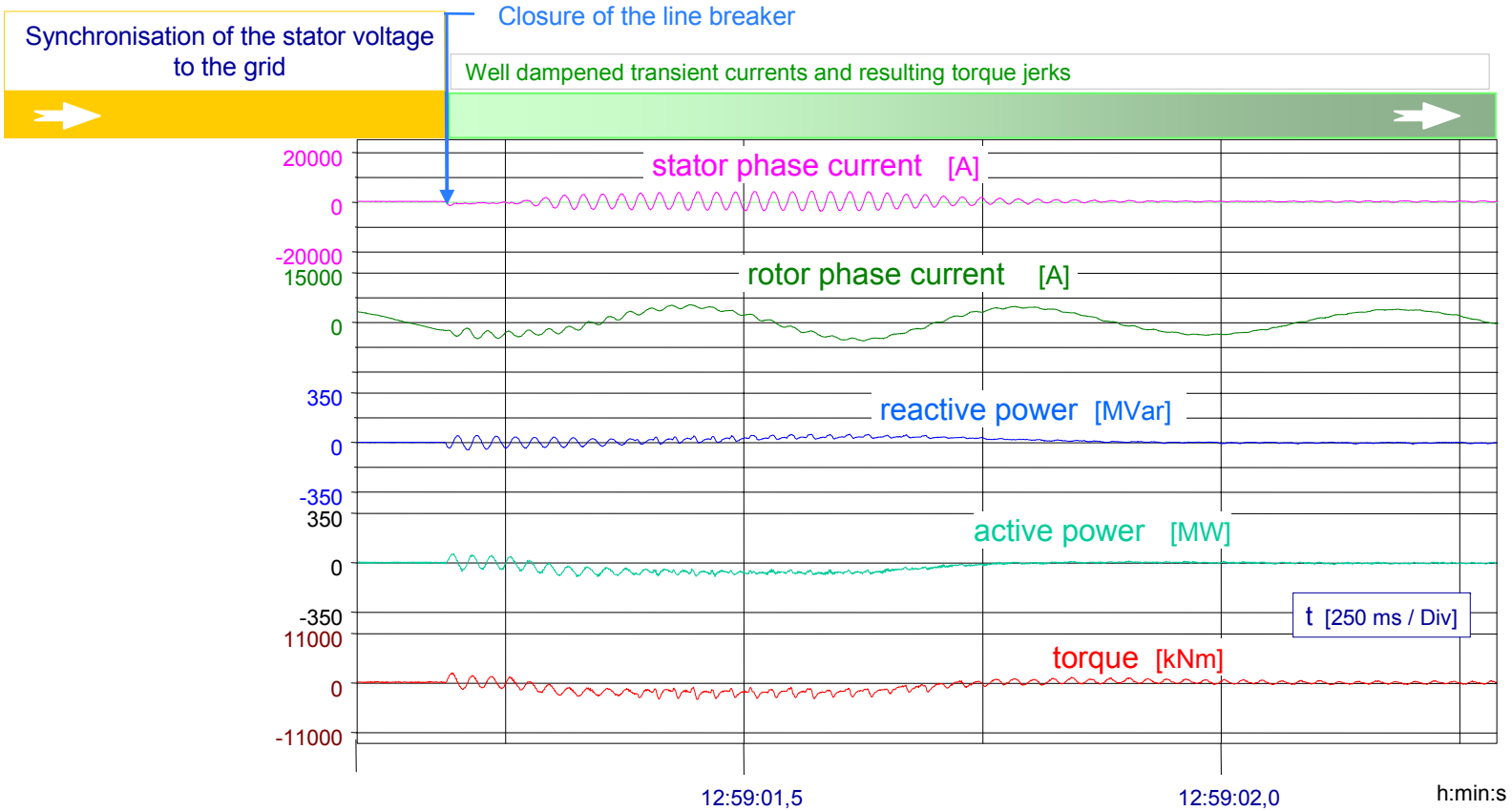

Measurements at closure of the line breaker