CAPSIM

Virtual machinery of the cruise ship C32

for dynamic performance studies

CAPSIM

Presentation summary

- Context
  - Project organization
  - Project objectives
  - Machinery of the cruise ship C32
- Simulation tool definition :
  - Problems solved
    - Heterogeneous model case
    - Proper model library
    - Parameters getting
    - Integrating models
  - Results
- Simulation tool exploitation :
  - Problems solved
    - Global model exploitation
    - Library management
  - Results : examples / scenarios
- Conclusion

Project context

- Cruise ship C32 built by ALSTOM Marine (Chantiers de l'Atlantique) for P&O
- ALSTOM Marine chose model and simulation as basis of this study
- CAPSIM realized the stability studies of the machinery for ALSTOM Marine

CAPSIM

Project objectives

Industrial tool for prediction of the machinery behavior

- Under steady state conditions
- On normal working transients
  - Load increase and rejection
  - Swell impact
  - Crash stop maneuver
- During abnormal conditions
  - Trip of generators
  - Trip of propulsion motors
  - Short circuits

Essential parameters

- Frequency
- Currents
- Voltage
- Power factor
- Load sharing

Analysis of

- Dynamic performance
- System stability
- Plant flexibility

! Operational calculation time on classical PC

CAPSIM

Machinery of the cruise ship C32

Characteristics of the plant :

- 2 main diesel generators (17 MW / 11 kV each),
- 1 gas turbine generator (25 MW / 11 kV),
- 2 propulsion electric motors (20 MW each),
- 11 kV / 690V main switchboards,
- Harmonic filters,
- Electric motors for pumps, fans, thrusters or compressors,
- Power and propulsion management systems.
- Hotel load

Specific problems to AES (All Electric Ship):

- Different type of prime movers (turbine, diesels),
- Global power management.

CAPSIM

Problem solved : heterogeneous model case

Specificities :

- Multi-domain phenomena
  - Electrical
  - Mechanical
  - Thermo dynamical
  - Regulations
- Large panel of time constants
  - Fast : commutation in converters
  - Slow : load sharing

<u>Solution</u> = use of a proper simulation platform

PSIM software from **Powersim Technologies**

- Simple using (graphic interface)
- Adapted to power electronics
- Adapted to multi-domain power transfer
- Open (Fortran or C code)

Problem solved : heterogeneous model case

Example : diesel generator model 17 MW

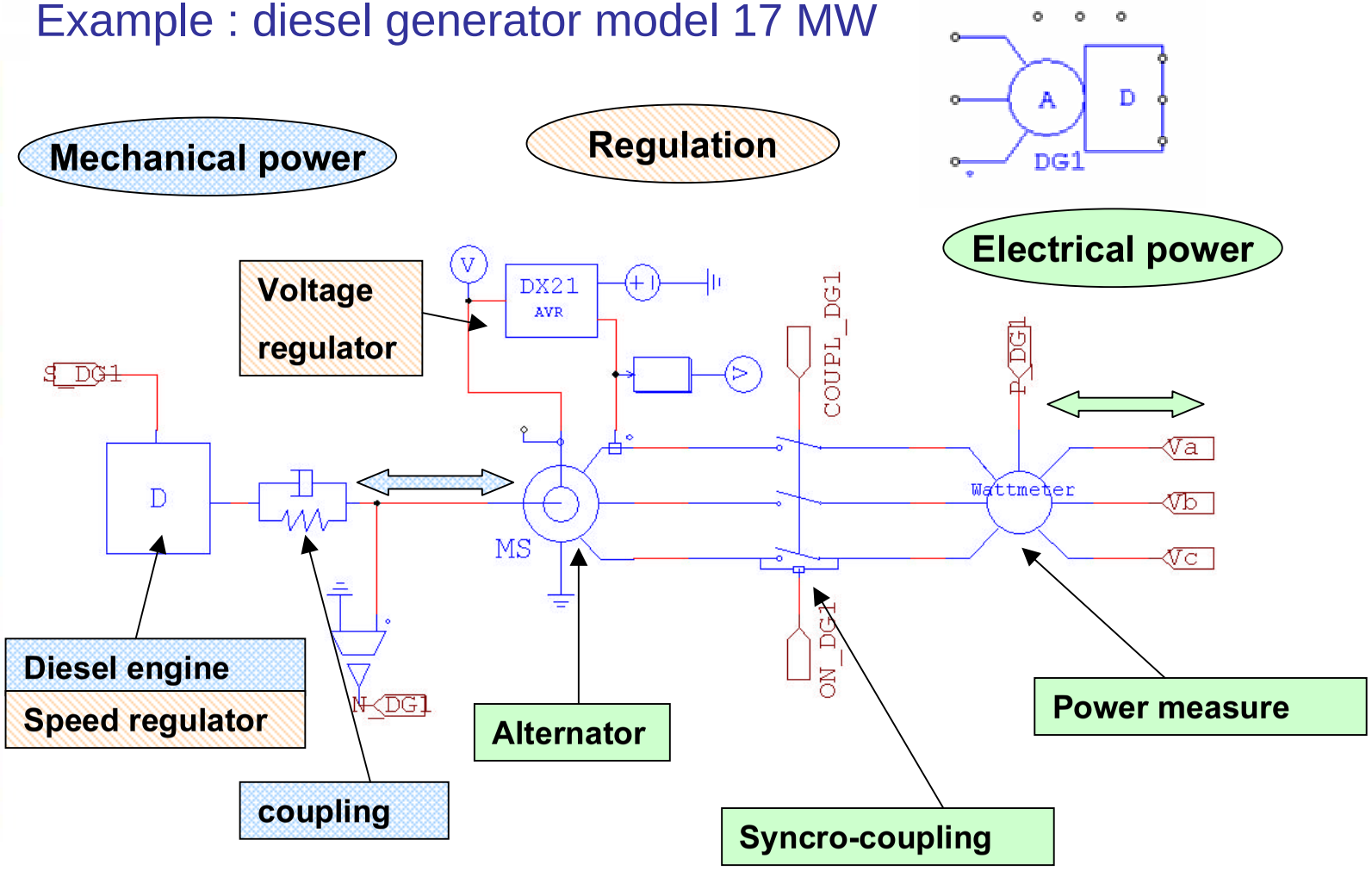

CAPSIM

Problem solved : proper model library

Defining model = managing the trade off

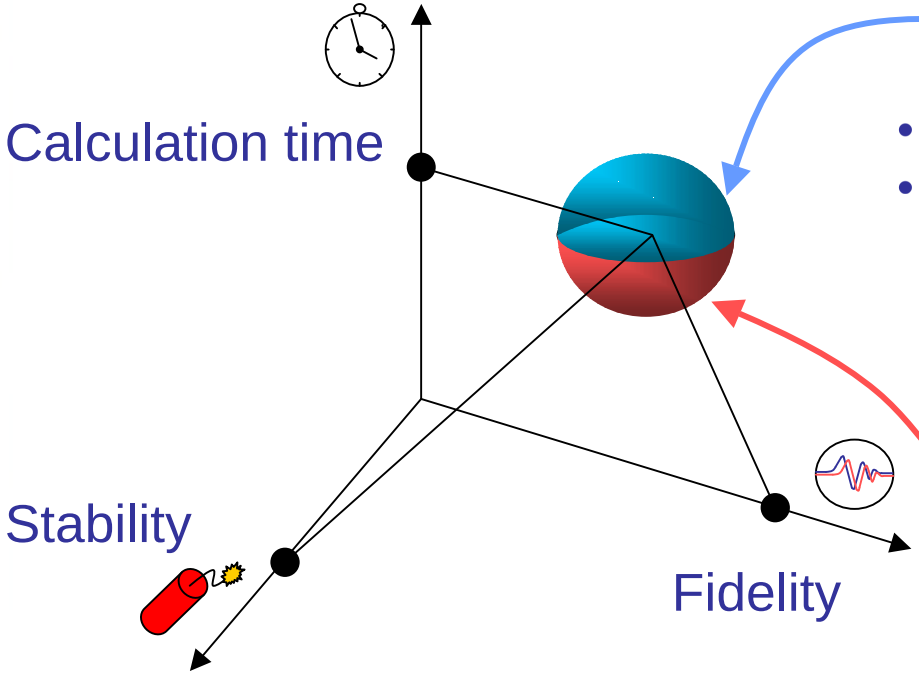

No generic solutions

Input data :

CAT application

- C32 network
- Simulation objectives
  - Validation of technical options
  - Interoperability of equipments
  - Regulation design
  - Expertise during sea tests

Solver software
PSIM

CAPSIM

Problem solved : proper model library

Example : Diesel engine Wärtsilä 16V46C

Needed fidelity :

- **Steady state** torque and speed at any load
- Precise **speed response** for load step and rejection

Important phenomena :

- Fuel actuator / combustion **torque transfer**
- **Turbo charger** limitation non linearity
- Engine **losses**
- Speed **regulator** with droop

Solution = specific model

40 % load step from no load

1. Droop influence
2. Characteristic torque response (turbo charge influence)

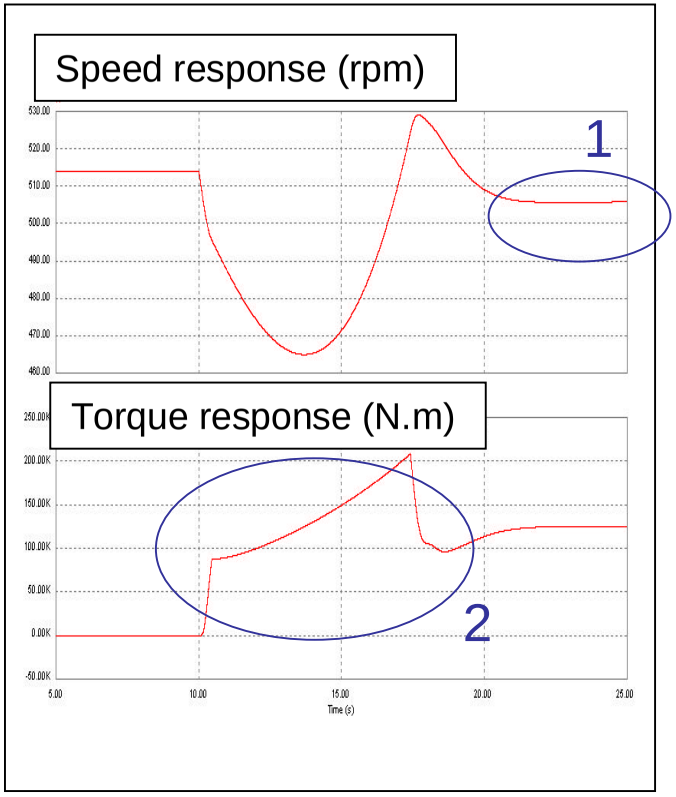

CAPSIM

Problem solved : parameters getting

C32 machinery data :

- Equipment from various industrial sources
  - Research problem multiplication
  - Different industrial cultures
- Unavailable parameters
  - Equipment in development
  - Confidentiality / industrial property

Solutions :

- Industrial partnerships
- Targeted dialog with ALSTOM
- Default parameters data base
- Models definition adapted with available elements

CAPSIM

Problem solved : parameters getting

Example : gas turbine
General Electric LM2500+

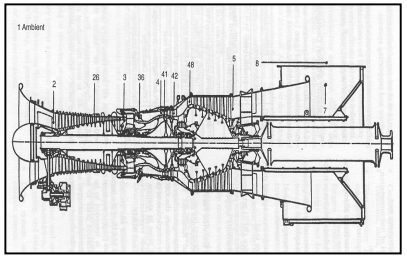

- Elements / parameters hold by GE
- Specific engine regulation for C32 application

→ No reliable generic model

Solutions :
- Confidential agreement ALSTOM/CAPSIM/GE
- Obtaining specific tunings / testing results
- Model adaptation / application

Results :
- Reliable validation of LM2500+ model
- Integration with synchronous alternators
- Precision on network frequency variations results

CAPSIM

Problem solved : integrating models

C32 machinery model :

- Integration of sub-models with :
  - many loops (mixed regulations)
  - many non-linearities
  - many state variables
- Difficult cases for calculation (ex : inductive circuit opening)
- Difficult initialization phase

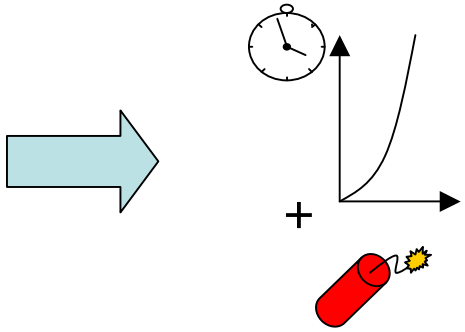

Solutions :

- Analysis of penalizing elements
- Development of fast and robust models for network integration
  - Work on initialization phases
  - Partnership with solver designer

CAPSIM

Problem solved : integrating models

Example : Propulsion converter model

- Platforms library converter models
  - Component commutation description
  - Heavy calculation time
- Stability study objectives
  - Propulsion load impact on network
  - Slow transient representation (> minute) on frequency and voltage

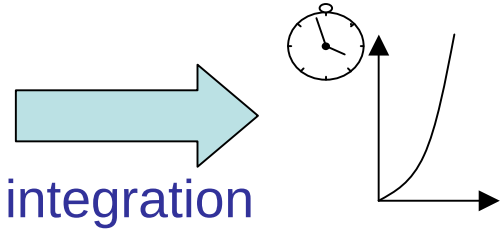

Solution :

Development of converter models without commutation / representing :

- Active and reactive power transfer with reversibility,
- Pass band and limitations.

Results :

Complete Crash stop simulation on the C32 machinery with calculation time reduction (factor 1/20)

Results : C32 simulation tool

Virtual machinery
> 700 blocs and elements
> 40 macro models
> 100 state variables

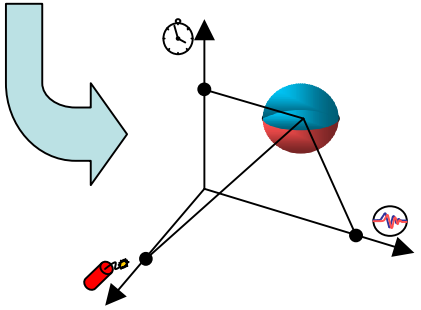

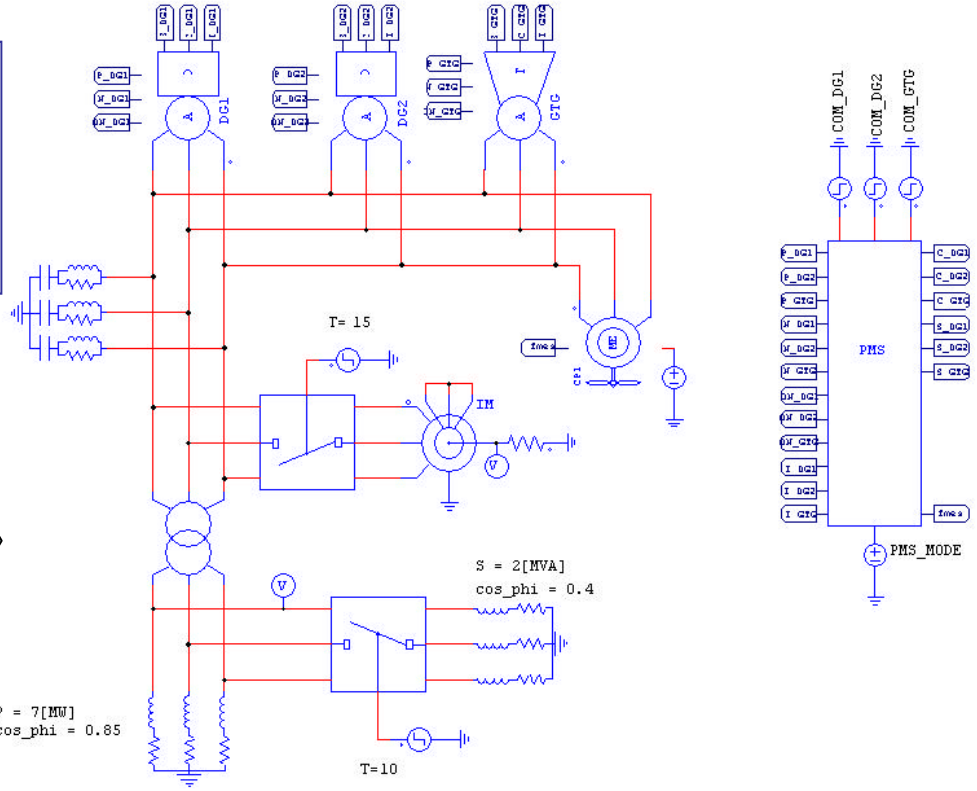

Exploitation of the tool :

1. Various scenarios defined with ALSTOM
2. Simulation phase
3. Result analysis

CAPSIM

Problem solved : global model exploitation

Complex definition of initial conditions and network configuration for stresses

Global C32 network :

- Many piece of equipment, non linearities and mixed regulation loops
- Many state variables
- PMS and PLS = sequential control

Solutions :

- Parameter definitions in user format
- Grouping of initial conditions
- User interface for scenarios definition

CAPSIM

Problem solved : global model exploitation

Example : design of PMS

Needs for :

- Initialization of the complete network in coherence with PMS
- Representing complex scenarios (unshared load cases)

Solution : easy user interface

1 Global load / sharing mode selection on PMS

2 Only “initial p.u. load” of generators to define

3 Automatic calculation of all initial conditions :

- Mechanical torques, alternators currents, coupling device ..
- Internal PMS states (orders, set points).

Results : evaluation of PMS strategies using :

- Non-reduced models for equipments
- Complete network model to close the loop

CAPSIM

Problem solved : library management

Model and simulation risks : !

- Models multiplication
- Data multiplication
- Results multiplication

→ Study process is no longer controlled

Principle : results must be reproducible

Solutions :

- Structure of the C32 library
  - Component models : generic, reusable
  - System models : specific, characterized
- Version management (models and results)
- Simulation platform management
  - Bugs
  - Evolutions

Example 1 : motors start

Conditions

1 gas turbine generator + sudden and simultaneous start of a thruster motor and air conditioning motor

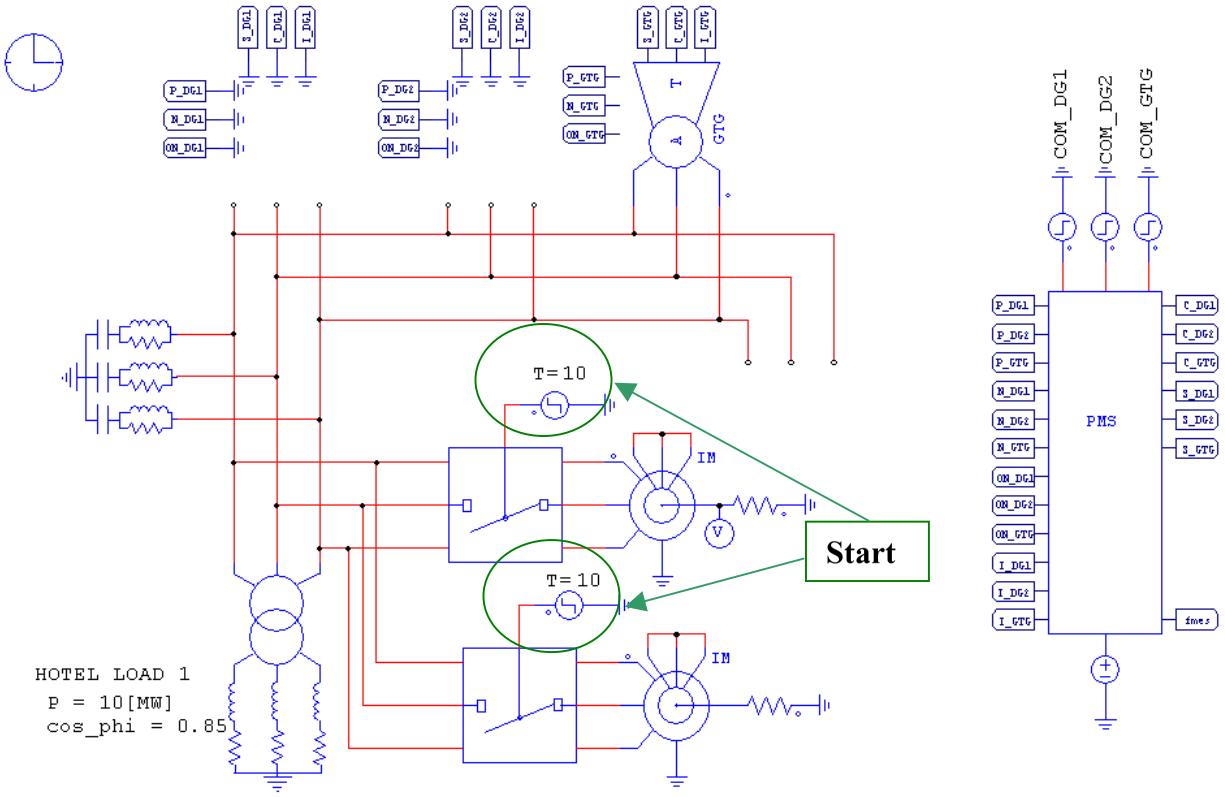

Example 1 : motors start

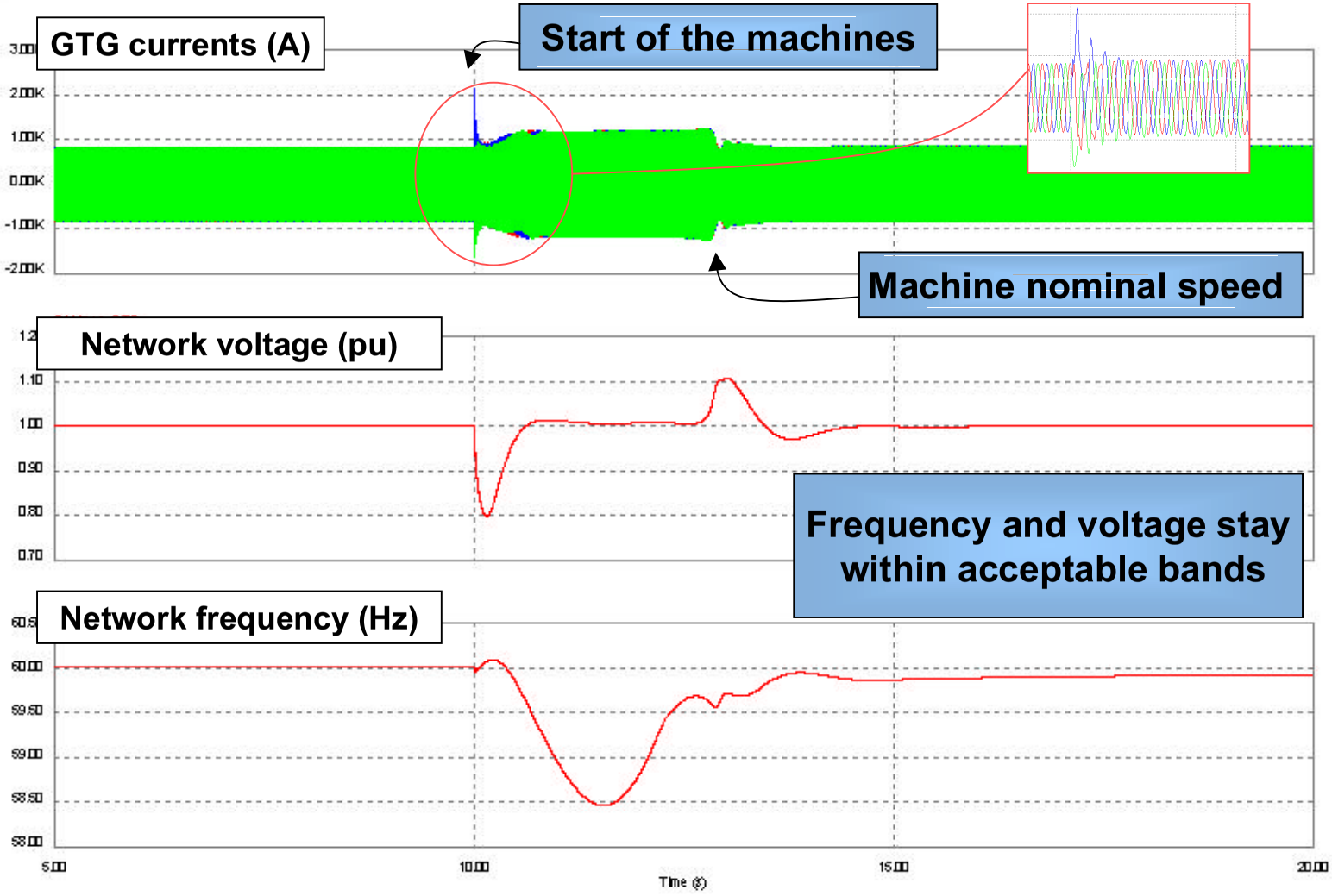

Example 2 : generator trip

Conditions

1 diesel generator + gas turbine generator loaded at 95% of their nominal load. Trip of a GTG

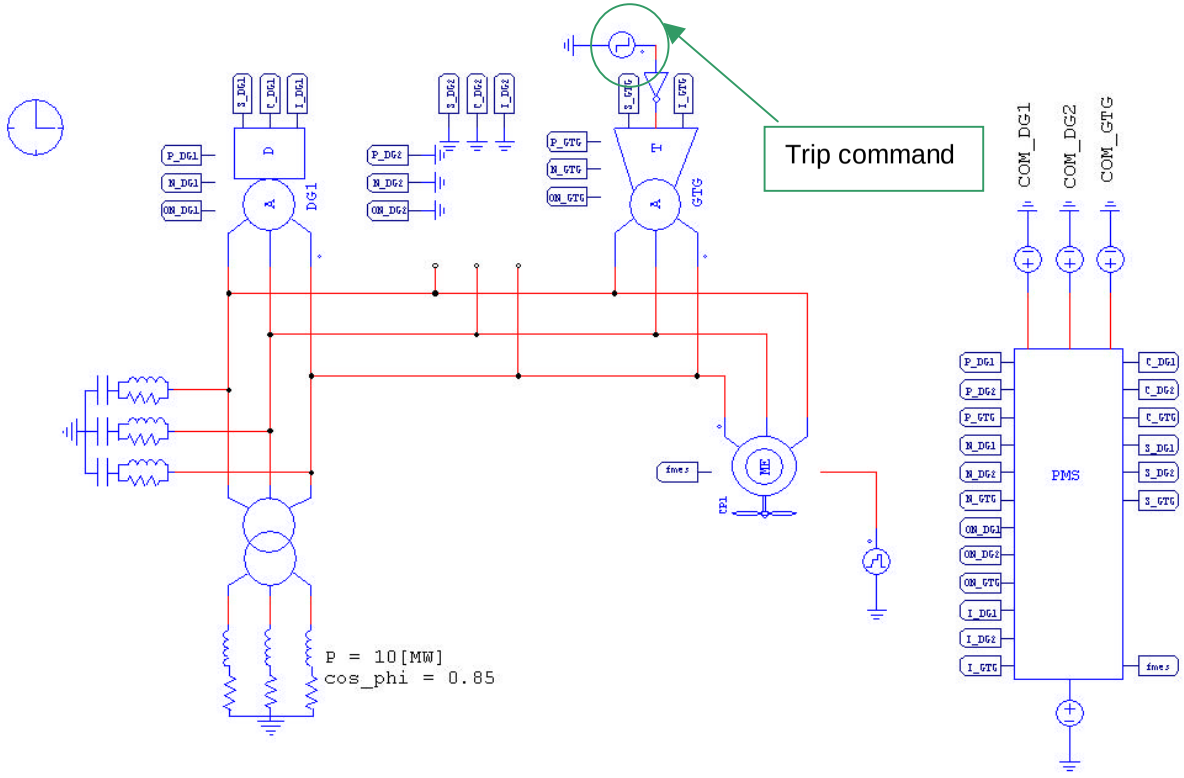

Example 2 : generator trip

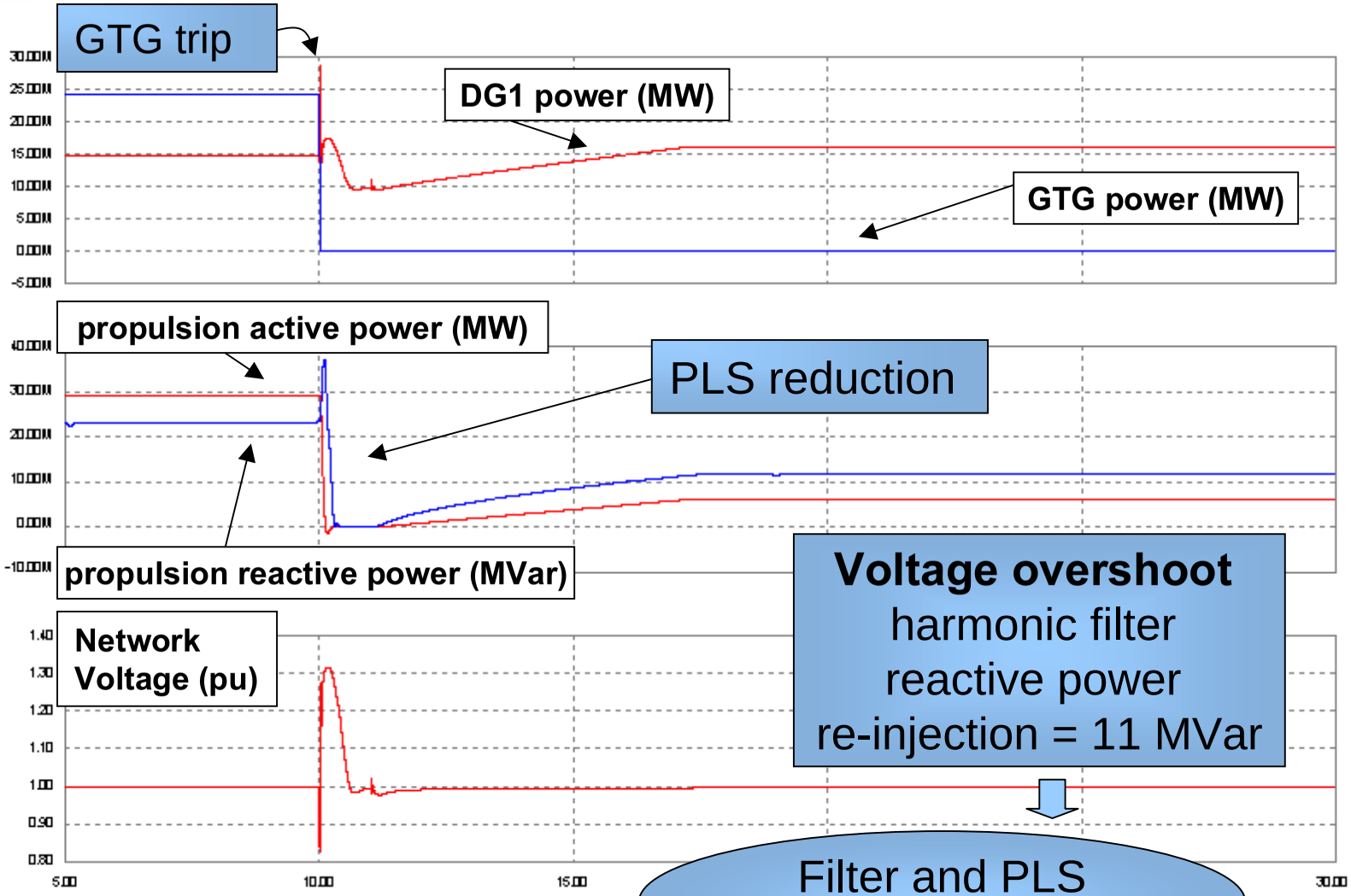

Voltage overshoot
harmonic filter
reactive power
re-injection = 11 MVar

Filter and PLS
design and tuning

Example 3 : crash stop

Conditions

2 diesel generators + gas turbine generator loaded at 85% of their nominal load. Crash stop

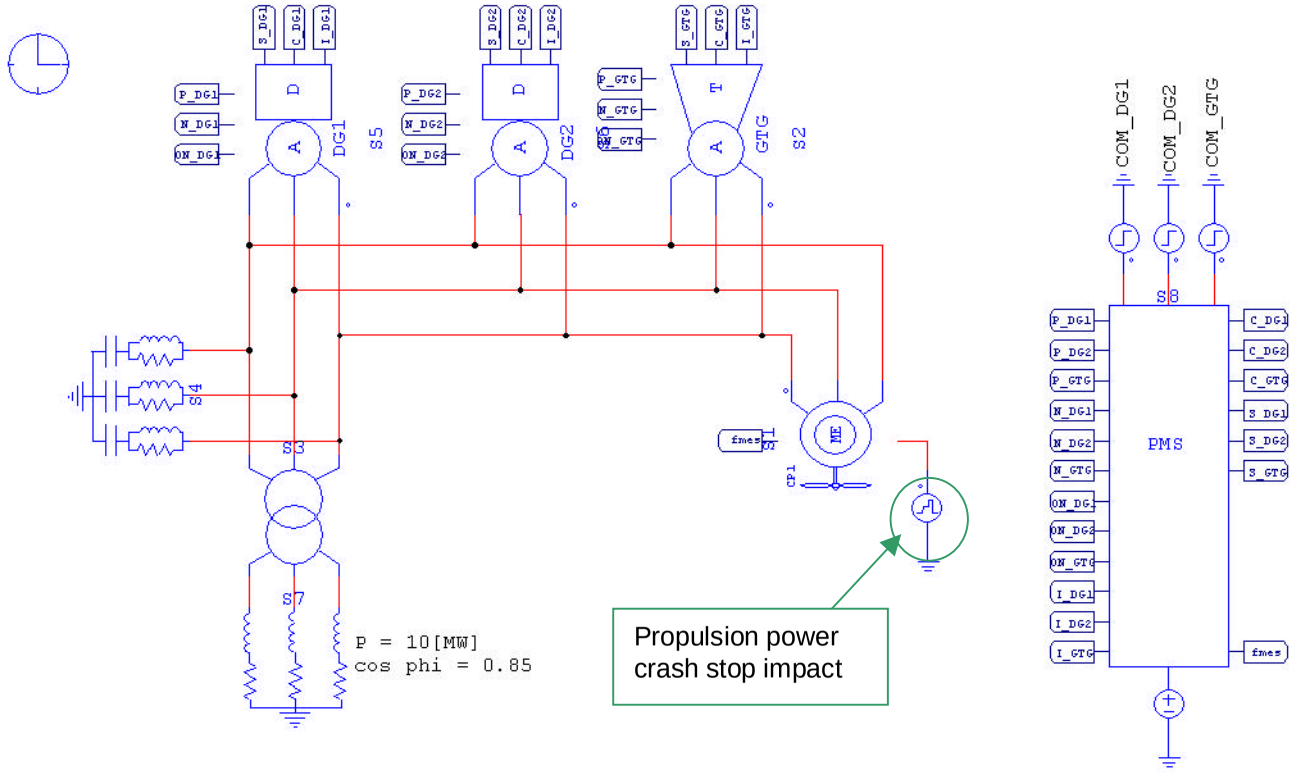

Example 3 : crash stop

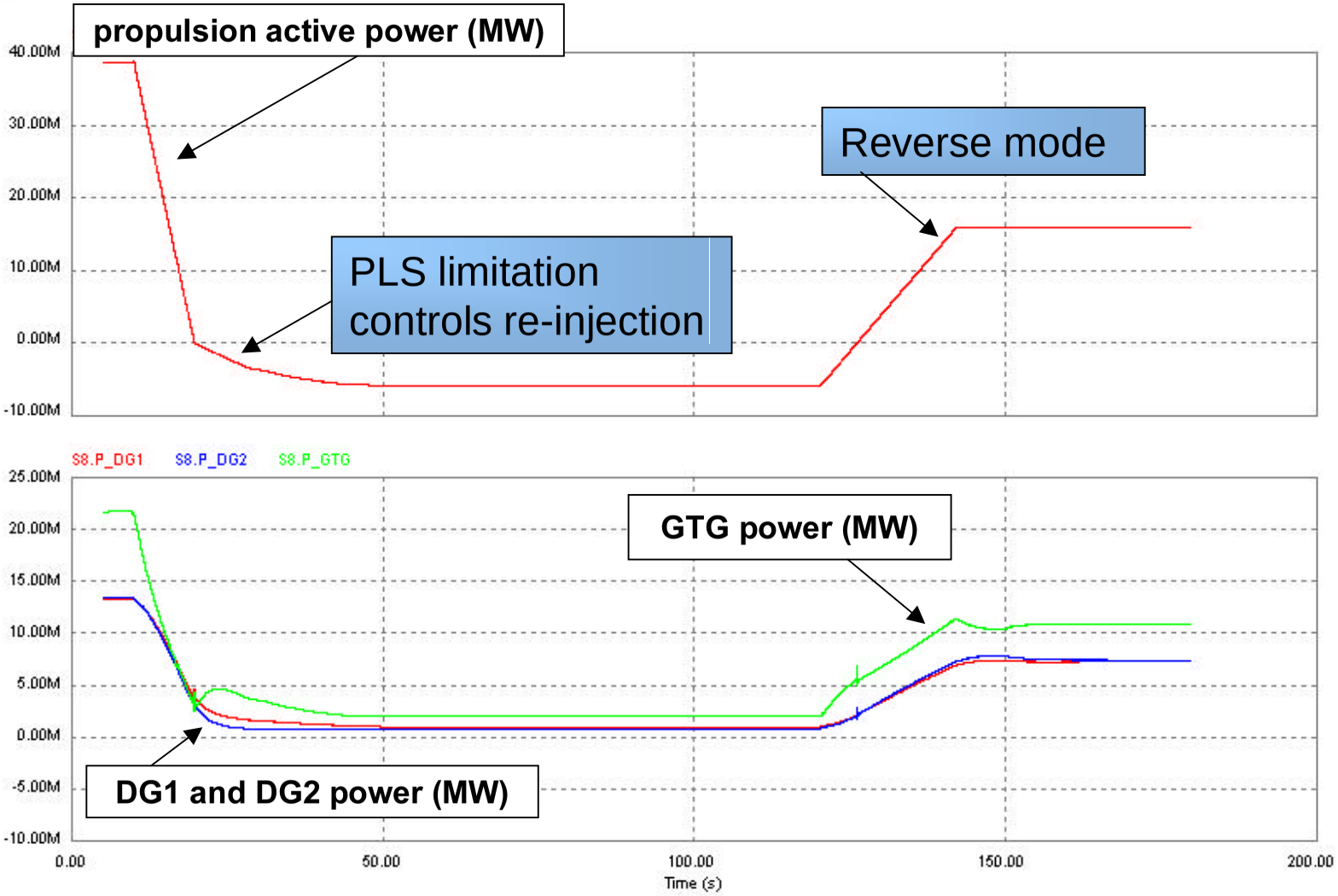

Example 3 : crash stop

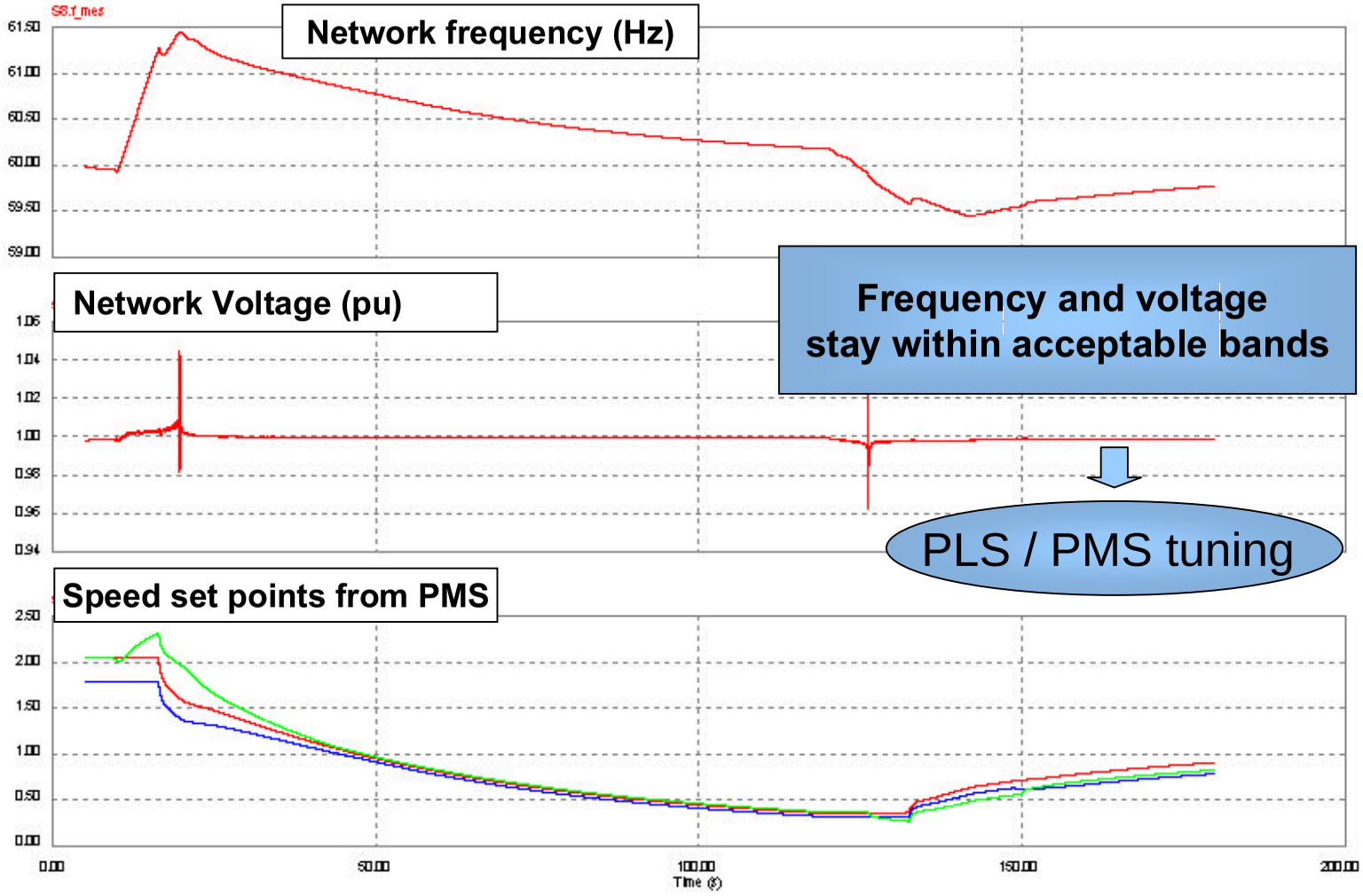

Frequency and voltage stay within acceptable bands

PLS / PMS tuning

CAPSIM

Conclusion

Virtual machinery = a great contribution to the C32 project :

- Validation of C32 turbine/diesel dynamic association
- Frequency / voltage variations evaluations on extreme cases
- Generators trip simulations pointed out needs for modification of harmonic filters or PLS strategies

Capabilities of virtual machinery :

- Link with ship dynamics models for global propulsion studies
- Complete IAMCS definition and validation
- Short-circuit and protection system studies

CAPSIM

La performance par la simulation

Contact : info@capsimulation.com

www.capsimulation.com

Tel : +33 4 42 63 61 18 / Fax :+33 4 42 63 61 19