Transient Recovery Voltages (TRVs) for High-Voltage Circuit Breakers Part 2

Denis Dufournet

Chair CIGRE WG A3.28 & IEEE WG C37.011

San Antonio (USA), 19/09/2013

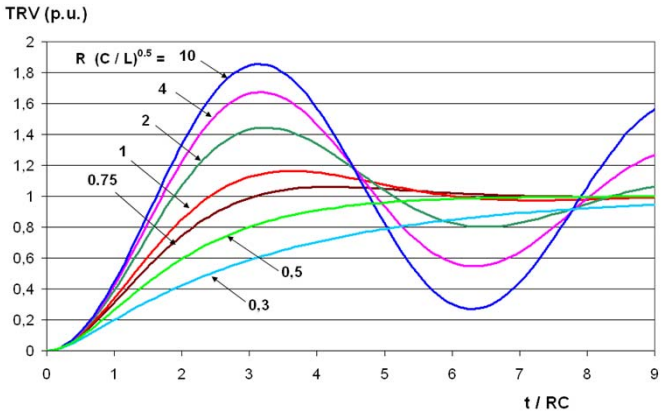

GRID

ALSTOM

Initial Transient Recovery Voltage

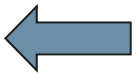

ALSTOM

Initial Transient Recovery Voltage (ITRV)

- Due to travelling waves on the busbar and their reflections, a high-frequency voltage appears on the supply side of a circuit breaker after short-circuit current interruption.

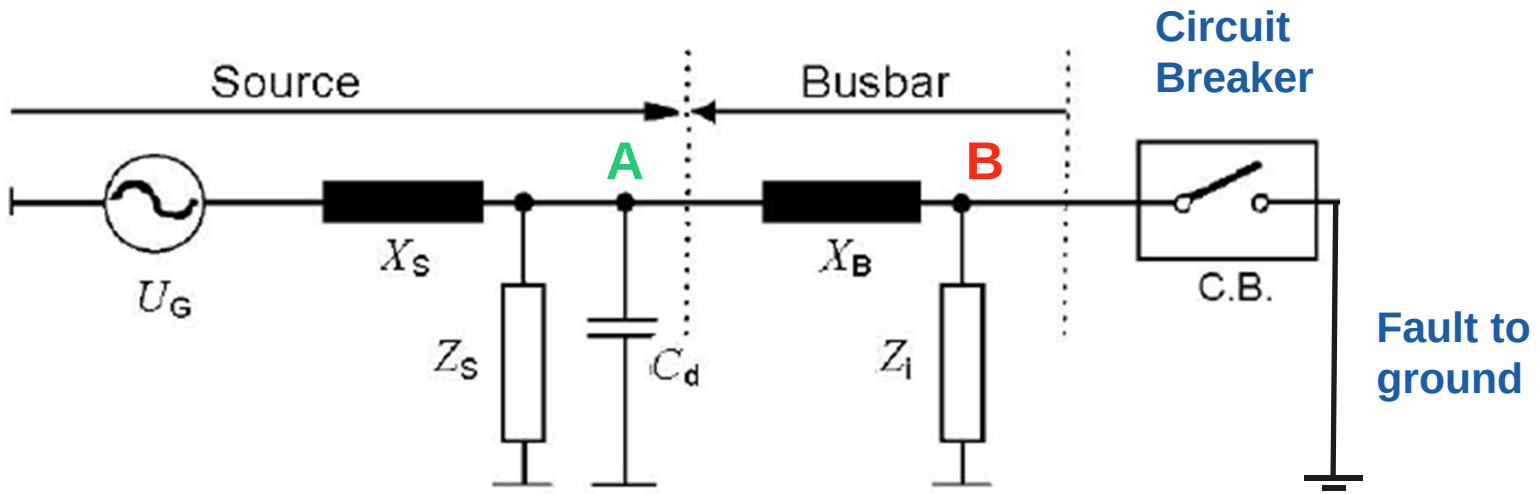

- This oscillation, which is called “Initial Transient Recovery Voltage (ITRV)” is superimposed to the very beginning of the terminal fault TRV.

GRID | ALSTOM

Initial Transient Recovery Voltage (ITRV)

- ITRV and terminal fault TRV

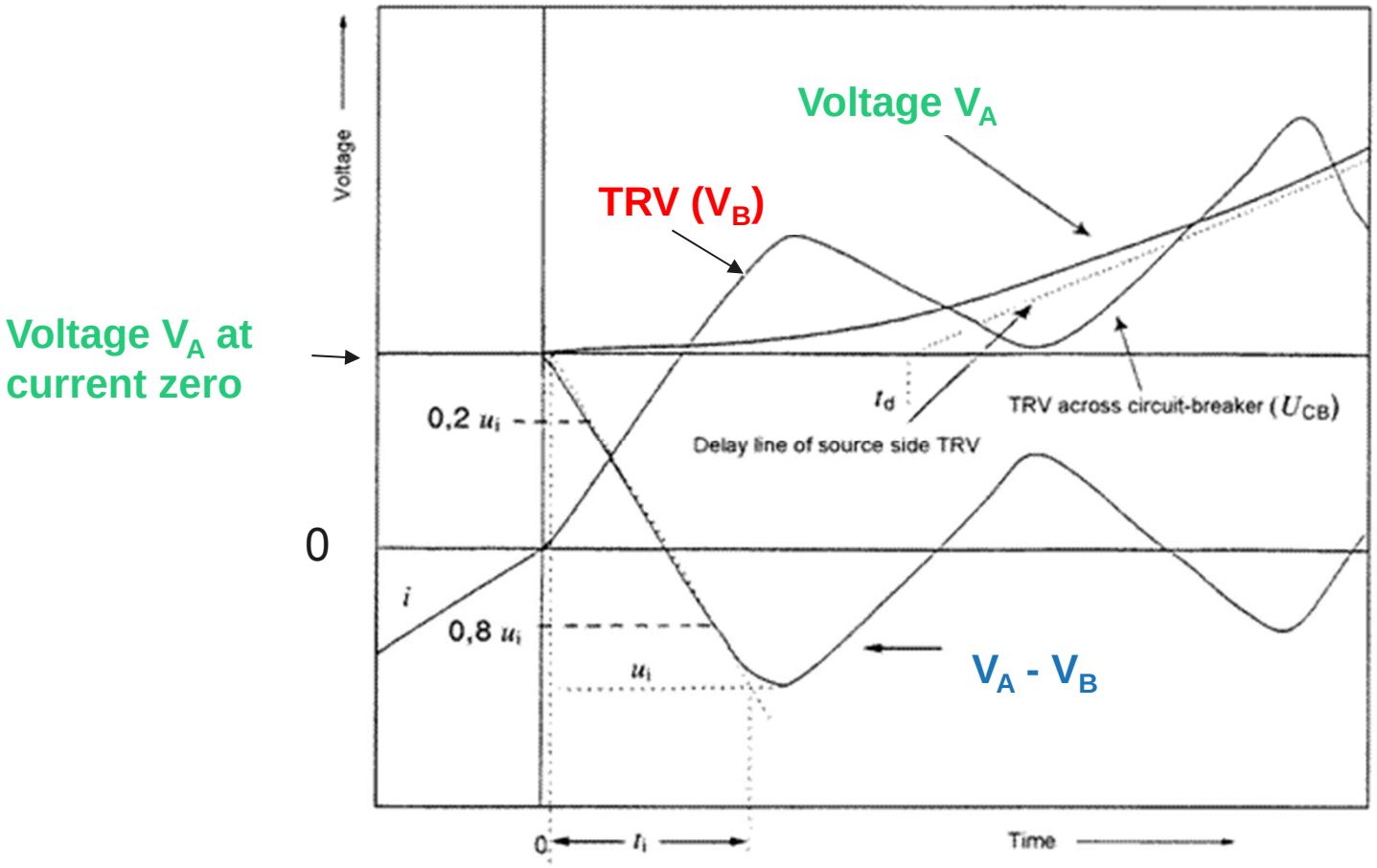

GRID | ALSTOM

Initial Transient Recovery Voltage (ITRV)

- Standard values of ITRV

Table 7 – Standard values of initial transient recovery voltage – Rated voltages 100 kV and above

Rated voltage U_r kV	Multiplying factor to determine u_i as function of the r.m.s. value of the short-circuit breaking current I_{sc}* F_i kV/ kA		Time t_i µs
	50 Hz	60 Hz	
100	0,046	0,056	0,4
123	0,046	0,056	0,4
145	0,046	0,056	0,4
170	0,058	0,070	0,5
245	0,069	0,084	0,6
300	0,081	0,098	0,7
362	0,092	0,112	0,8
420	0,092	0,112	0,8
550	0,116	0,139	1,0
800	0,159	0,191	1,1

Z_b = 260 Ω in general,

but

325 Ω for U_r= 800 kV

GRID | ALSTOM

Initial Transient Recovery Voltage (ITRV)

- Compared with the short-line fault TRV, the first voltage peak is much lower, and the time to the first peak is shorter, within the first two microseconds after current zero.

If a circuit breaker has a short-line fault rating and SLF tests are performed with a line having a time delay less than 0.1µs, the ITRV requirements are considered to be covered.

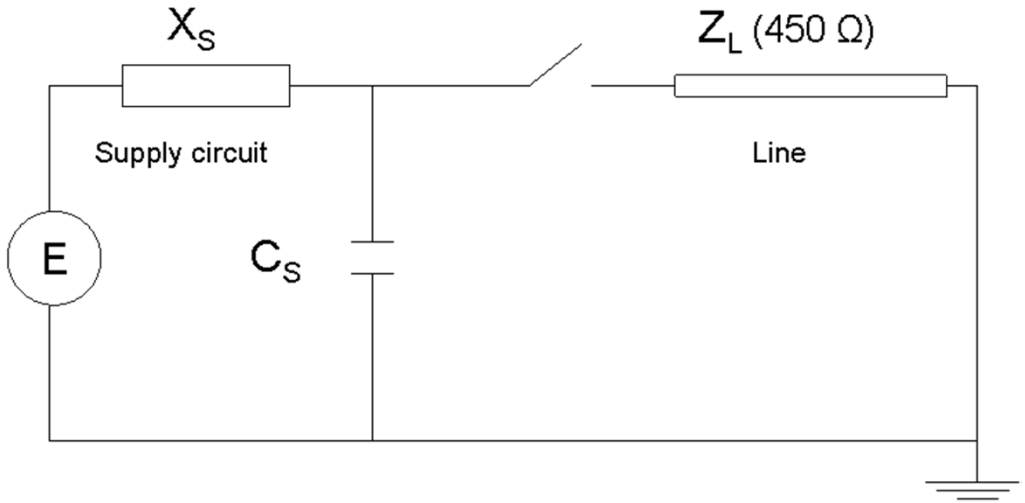

Equivalent circuit for SLF testing

GRID | ALSTOM

Initial Transient Recovery Voltage (ITRV)

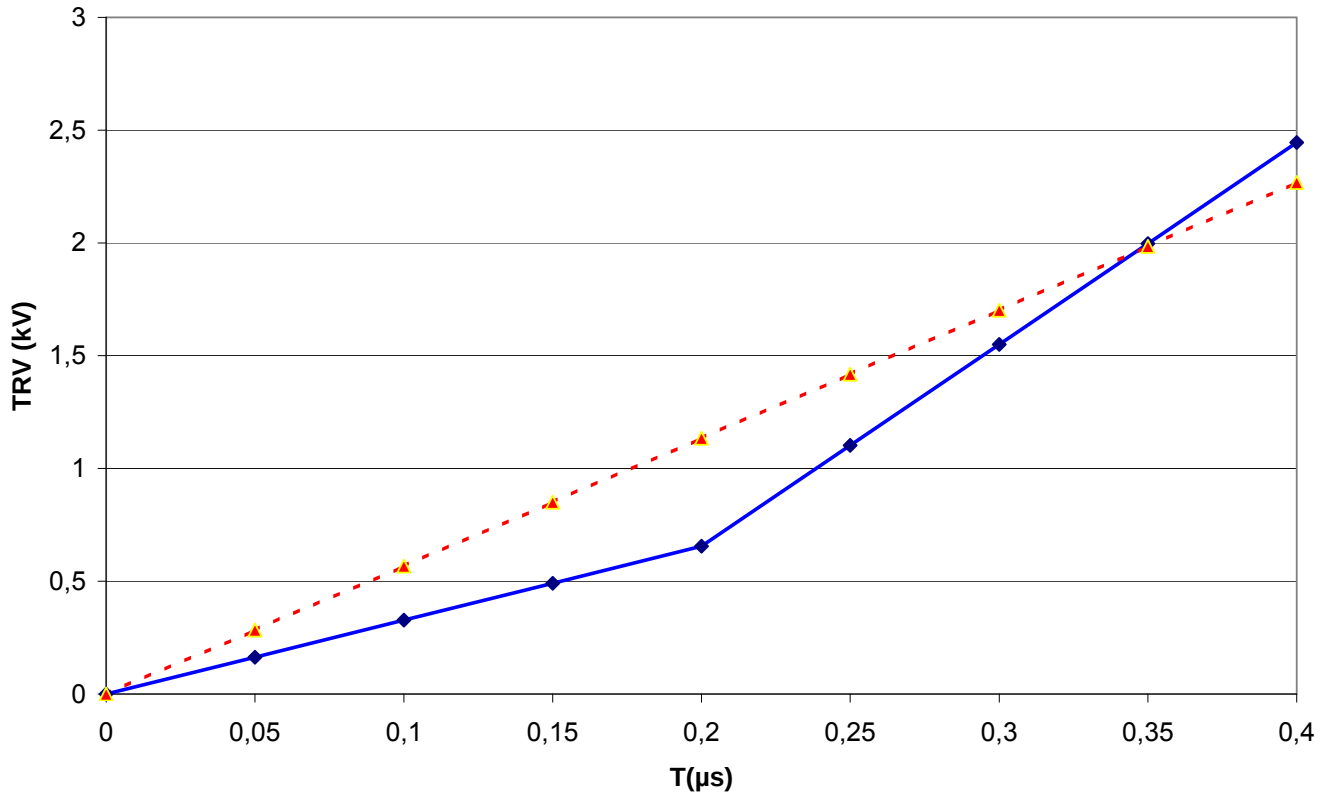

Comparison of TRV for SLF with time delay and ITRV (solid line) and SLF with time delay less than 0.1 µs (dotted line).

GRID | ALSTOM

Initial Transient Recovery Voltage (ITRV)

- ITRV is proportional to the busbar surge impedance and to the current.

ITRV requirements can be neglected

- for circuit-breakers with a rated short-circuit breaking current less than 25 kA,

- for circuit-breakers with a rated voltage below 100 kV,

- for circuit-breakers installed in metal enclosed gas insulated switchgear (GIS), because of the low surge impedance,

- when the capacitance of the liaison to the bus is higher than 800pF (amendment IEC 62271-100 in 2012).

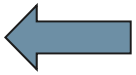

Out-of-Phase

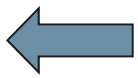

ALSTOM

Breaking in Out-of-Phase Condition

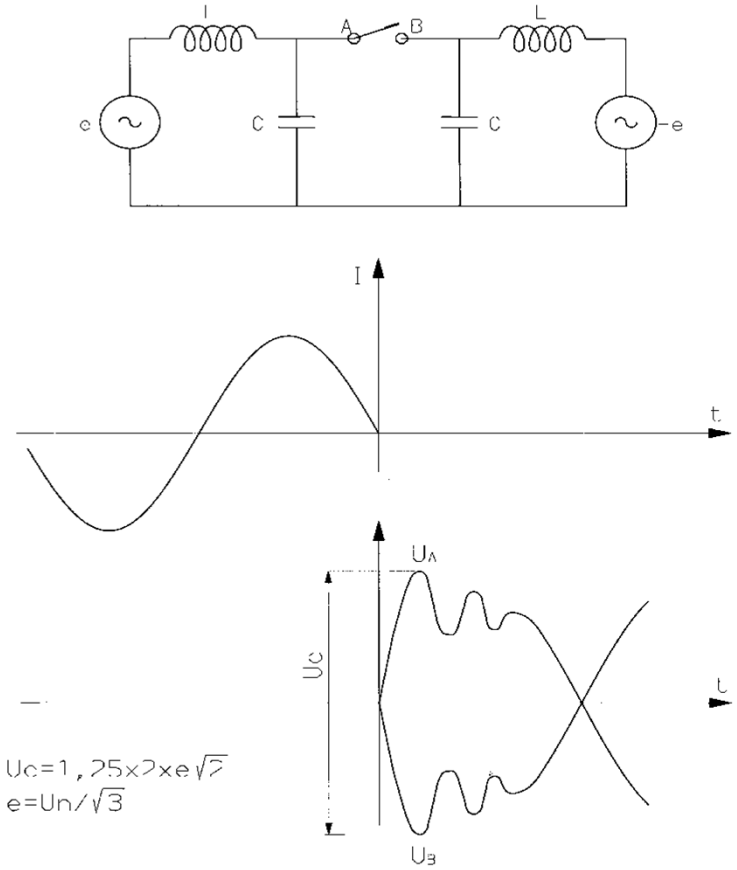

Some circuit-breakers may have to interrupt faults that occur when two systems are connected in out-of-phase conditions.

At current interruption, the voltage on each side of the circuit-breaker meets the voltage of the supply.

In full out-of-phase condition, the recovery voltage is two times the phase-to-ground voltage.

The TRV peak is the highest during short-circuit interruption.

Fault current is 25% of rated short-circuit breaking current.

GRID | ALSTOM

Voltages During Breaking in Out-of-Phase

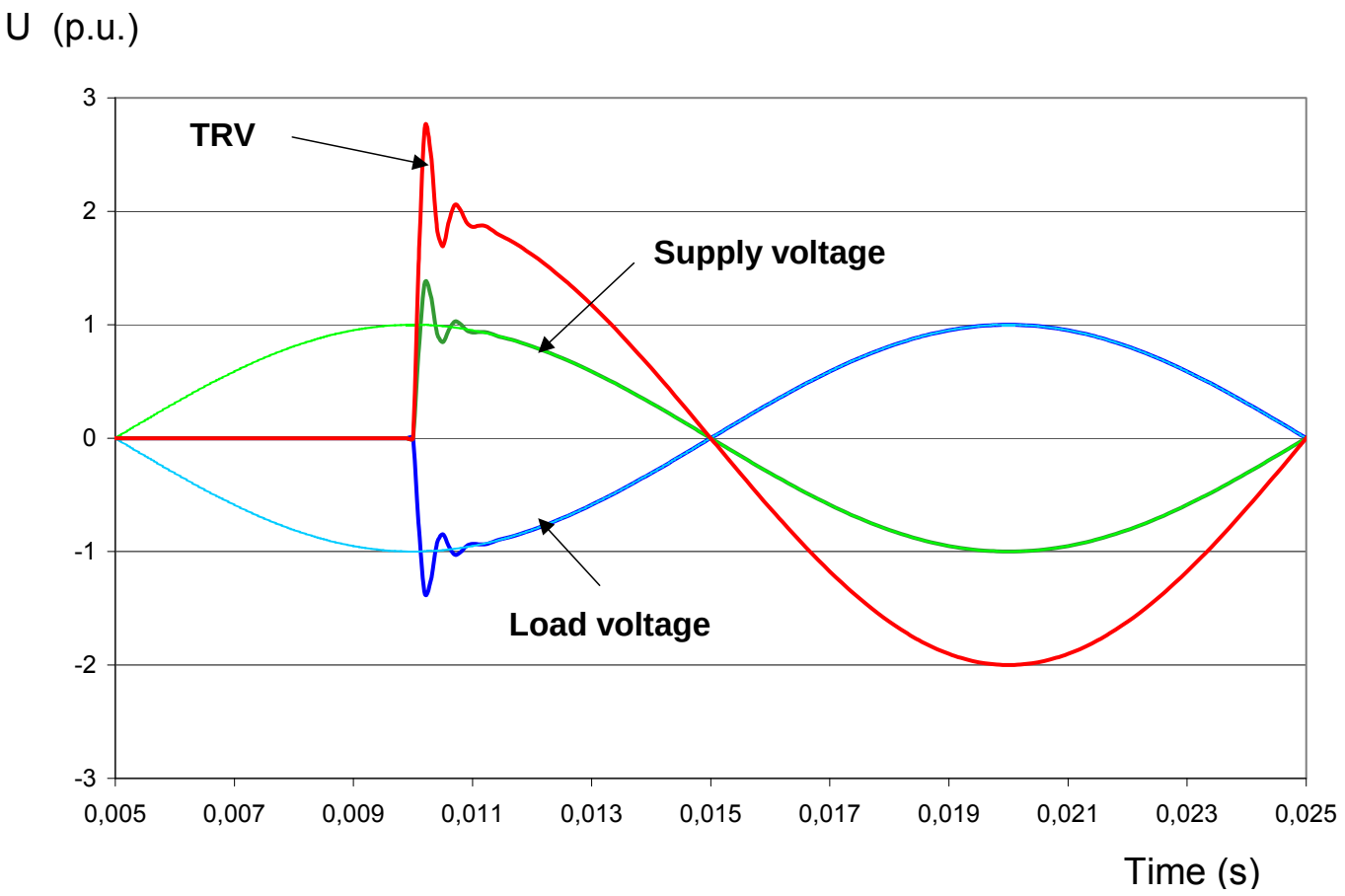

In case of single-phase fault in full out-of-phase, the pole to clear factor is 2.

GRID | ALSTOM

Voltages during Breaking in Out-of-Phase

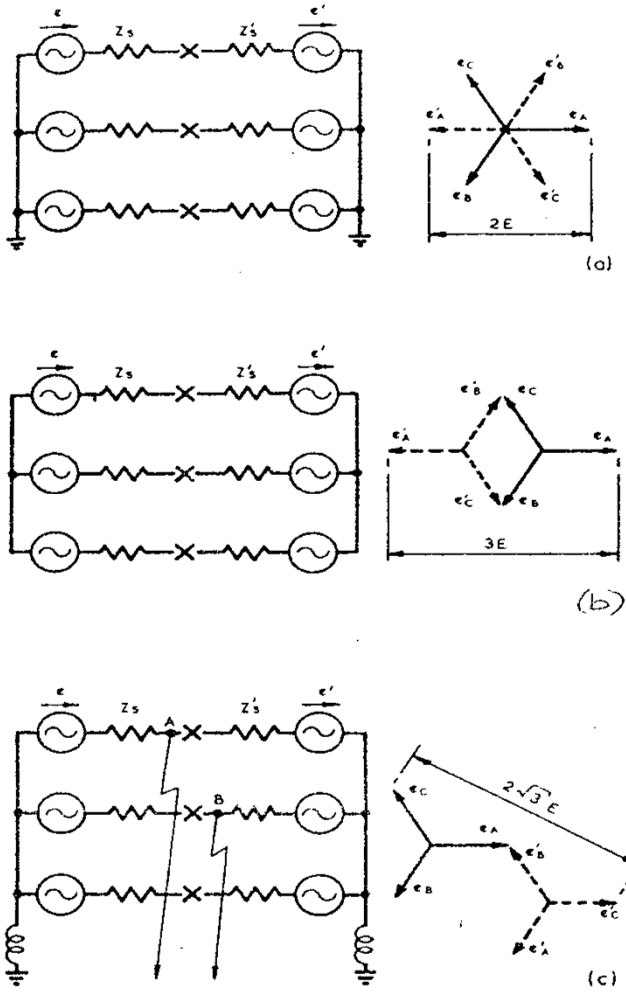

In standards the out-of-phase factor for single-phase tests is

2.0 for effectively grounded systems (≥ 245kV)

2.5 for non-effectively grounded systems (<245kV).

GRID | ALSTOM

Out-of-Phase Angle

- The standard out-of-phase factor of

  2.0 for effectively grounded systems and
  2.5 for non-effectively earthed systems

  cover respectively an out-of-phase angle of

  105° for systems with effectively grounded neutral
  115° for systems with non-effectively grounded neutral

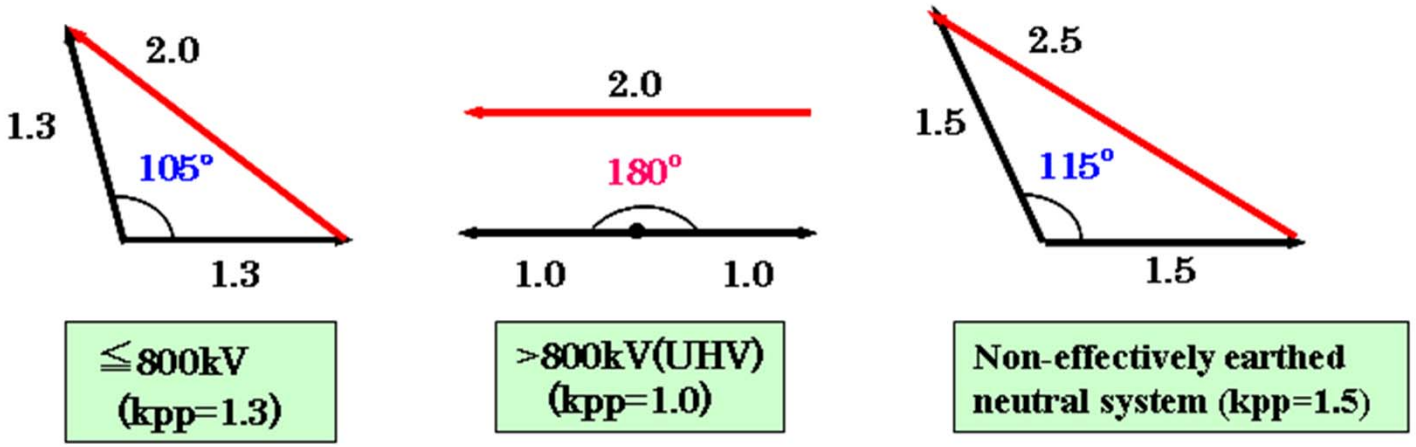

GRID | ALSTOM

Three-Phase (Long) Line Fault

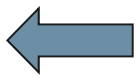

ALSTOM

Three-Phase Line Faults

- With some three-phase long line faults conditions the TRV may not be strictly covered by the standard TRV withstand capability defined for terminal fault and short-line fault.
- Such situations can occur, depending on the actual short-circuit power of the source, during interruption by the first-pole-to-clear of three-phase line faults.
- Mutual coupling of lines between the first interrupted phase and the two other phases can increase the line side contribution of TRV on the first pole to clear.
- The matter has been studied extensively by CIGRE WG A3-19. Results are given in CIGRE Technical Brochure 408 (2010-02).
- Studies were made also in Japan and USA (BPA).

Three-Phase Line Faults

- Examples of three-phase line faults TRV calculations are given in the following slides.
- The TRV withstand capability demonstrated by terminal fault test duties T10, T30 and out-of-phase test duty OP2 usually cover LLF TRVs.
- Some standard values of TRV have been revised (or will be revised) to better cover long line faults

  For rated voltages 245 kV and above, the amplitude factor for test duty T10 in IEC standard was raised from 1.53 to 1.76 (k_{pp} = 1.3).

- Requirements for short-line-faults are adequate and there is no need to revise them.

Three-Phase Line Faults

- Mutual Coupling Between Phases
  - The mutual inductance between two phases i and j can be evaluated by the following equation:

$$M_{ij} = \frac{\mu_0}{2\pi} \ln \frac{D'}{D_{ij}}$$

where μ_0 = air permeability = $4\pi \times 10^{-7}$ H/m

D_{ij} = center-to-center spacing between conductors (m)

D' = distance to the image of the other conductor

If a three-phase line-fault and a circuit with isolated source is considered to simplify the analysis, there is no 50 or 60 Hz short-circuit current circulating in the ground path. Therefore only the mutual inductances between phases must be considered to take into account coupling.

GRID | ALSTOM

Three-Phase Line Faults

- Mutual Coupling Between Phases (Cont'd)
  - After current interruption by the first pole to clear (e.g. in phase B) and during line TRV build-up, voltage is the induced voltage in phase B.
  - It is generated by the high short-circuit current still circulating through the two other phases A and C.

$$V_{ind} = M_{ab}\frac{dI_a}{dt} + M_{cb}\frac{dI_c}{dt}$$

  - The induced voltage is superimposed on the line TRV of the interrupted pole.
  - The next slide shows that when the induced voltage is subtracted from the actual line voltage in phase B (first cleared phase), then a typical triangular wave is obtained with a peak factor less than 2.
  - It shows clearly that during a 3-phase fault current interruption, the increase of the voltage peak on the first pole to clear is due to coupling between phases.

Three-Phase Line Faults

Currents

dI/dt

Actual line voltage

Induced voltage

Actual line voltage minus induced voltage

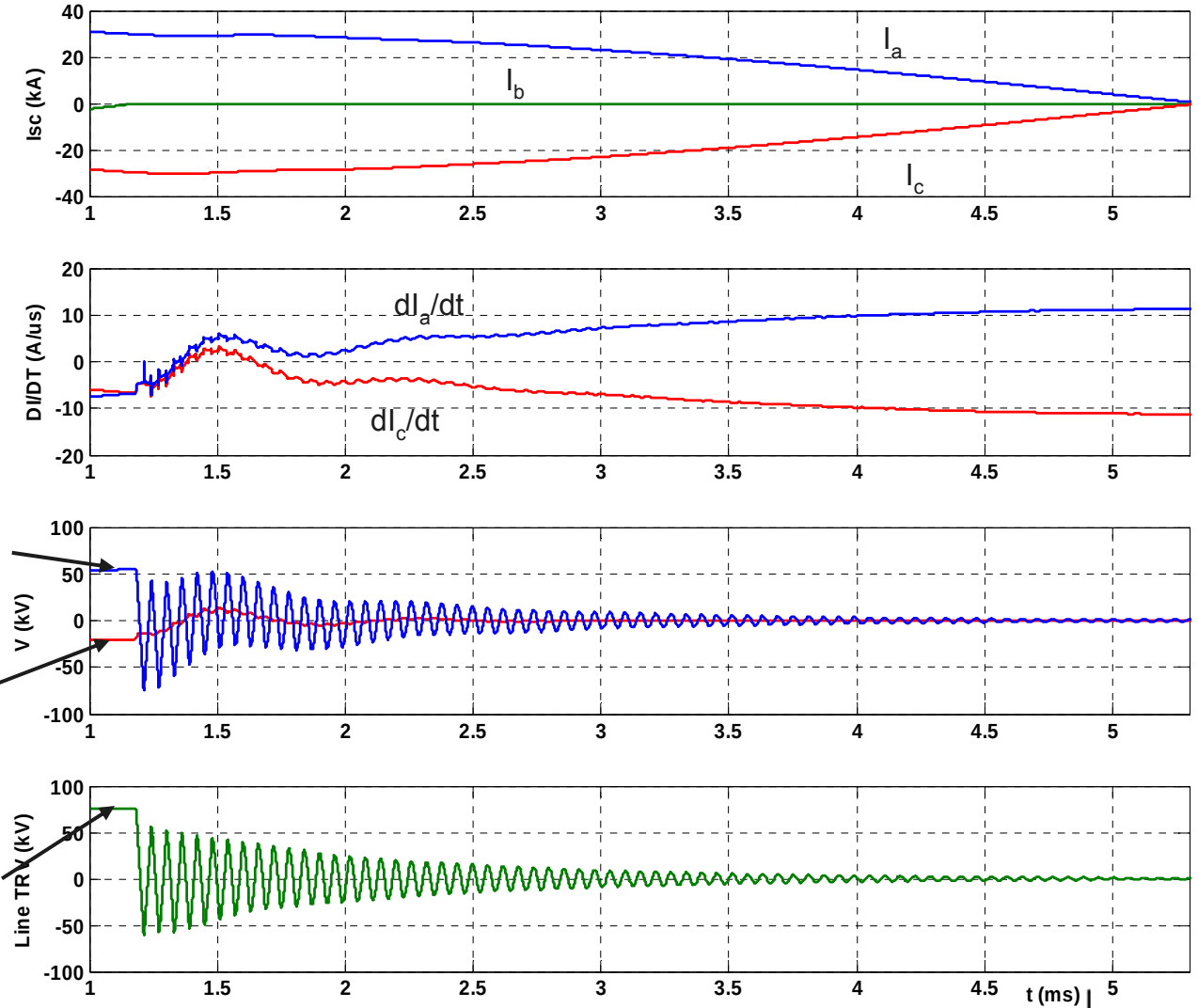

d = 2.37

d = 1.81

by M.Landry

GRID | ALSTOM

Three-Phase Line Faults

- Mutual Coupling Between Phases
  - From IEEE C37.011-2011: $\frac{d_3}{d_1} = \frac{2X_1 + X_0}{3X_1} \times \frac{Z_{first}}{Z_{last}}$

    d_3 and d_1 are the peak factors for 3-phase and single-phase faults.
    Z_{first} and Z_{last}: surge impedances for the first and last pole to clear

    It follows that $\frac{d_3}{d_1} = \frac{2L_1 + L_0}{3L_1} \times \frac{Z_{first}}{Z_{last}}$

    then with $L_m = \frac{L_0 - L_1}{3}$

    $$\frac{d_3}{d_1} = \left(1 + \frac{L_m}{L_1}\right) \times \frac{Z_{first}}{Z_{last}}$$

    where L_m represents the part influenced by the other phase currents.

    This equation gives a physical explanation for the relationship between d_3 and d_1.

Three-Phase Line Faults / Effective surge impedances for the first and last clearing poles

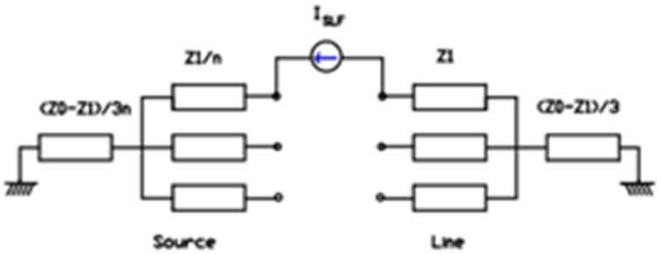

Last pole to clear (total RRRV)

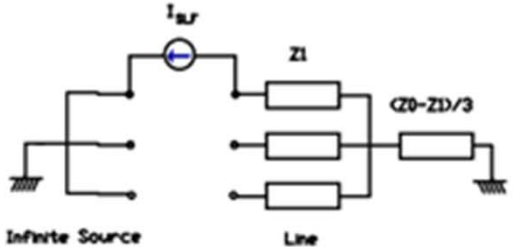

Last pole to clear (line side RRRV)

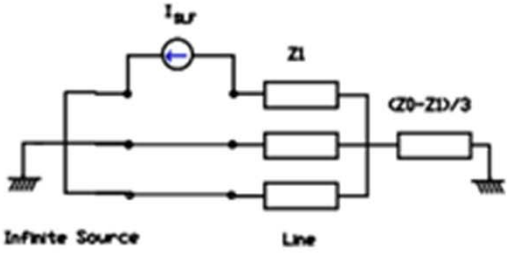

First pole to clear (line side RRRV)

GRID | ALSTOM

Three-Phase Line Faults / Effective surge impedances for the first and last clearing poles

- The equivalent surge impedance for the last clearing pole can be derived from the simple circuit in the middle:

$$Z_{last} = \frac{2Z_1 + Z_0}{3}$$

- For the first clearing pole, the neutral impedance and two of the other phases are in parallel, as shown in the bottom scheme.

  Reducing the connection and adding Z_1 results in the effective surge impedance for the first pole:

$$Z_{first} = \frac{3Z_0 \times Z_1}{Z_1 + 2Z_0}$$

Three-Phase Line Faults

- Typical values of surge impedance in IEEE C37.011-2011

Table A.2—Typical surge impedances

	System (kV)	Z_0 (Ω)	Z_1 [a] (Ω)	Z_{eff} [c] (Ω)
Overhead lines	145/170	560	350	420
	245	525	375	425
	362	430 [b]	280 [b]	330 [b]
	550	430 [b]	280 [b]	330 [b]
	800	400 [b]	265 [b]	310 [b]
Cables	72.5 145/170 245 362		Cable surge impedance depends on the cable type and configuration. Typically Z_1 and Z_{eff} range from 50 Ω to 75 Ω with $Z_1 \cong Z_{eff}$	
SF_6 buswork	All voltages		55	55

Note: Z_{eff} is the surge impedance for the last pole to clear (Z_{last})

U_r = 145kV Z_{last} = 420 Ω and Z_{first} = 400 Ω

GRID | ALSTOM

Three-Phase Line Faults

- Example 1: L30 and L10 in 735kV/40kA network

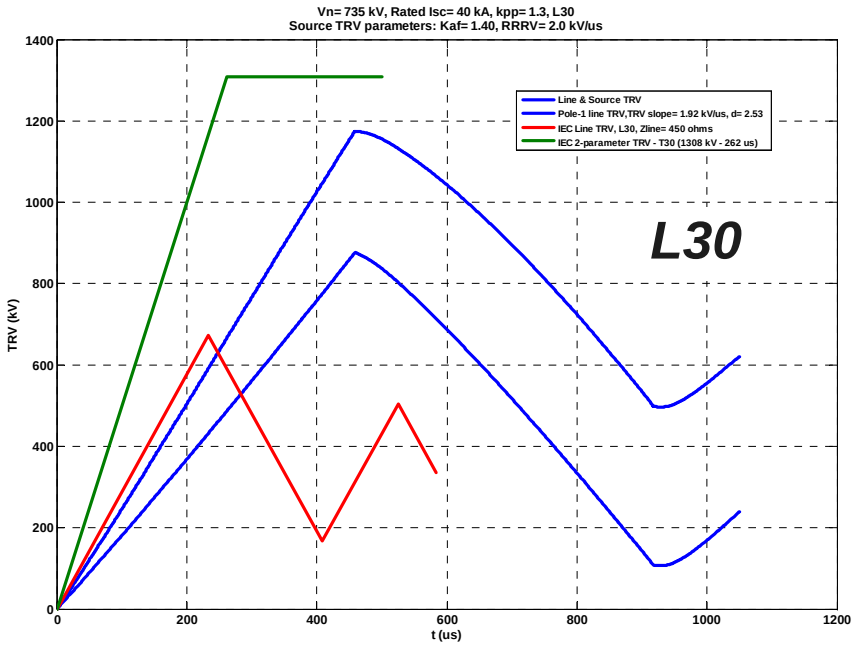

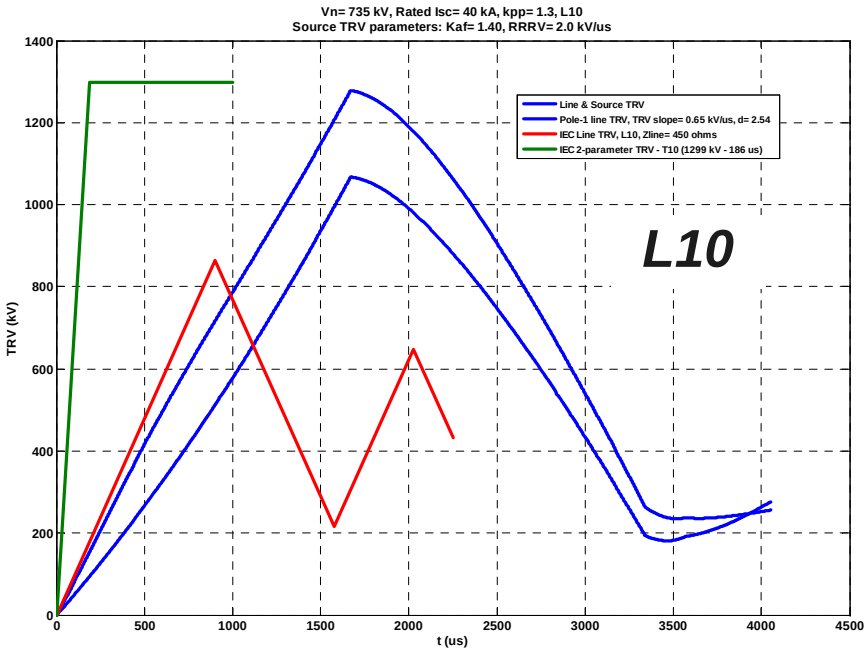

Comparison of first (blue) and last (red) clearing pole TRVs for three-phase L30 and L10, with total TRV for first pole (blue)

Note: the standard 2 parameter TRV with k_{pp}=1.3 is shown in green. In edition 2.0 of IEC 62271-100 and IEEE C37.06, k_{pp} has been increased to 1.5 for test duty T10.

GRID | ALSTOM

Three-Phase Line Faults

- Example 2: L30 and L10 in 420kV/63kA network with 100% short-circuit power source

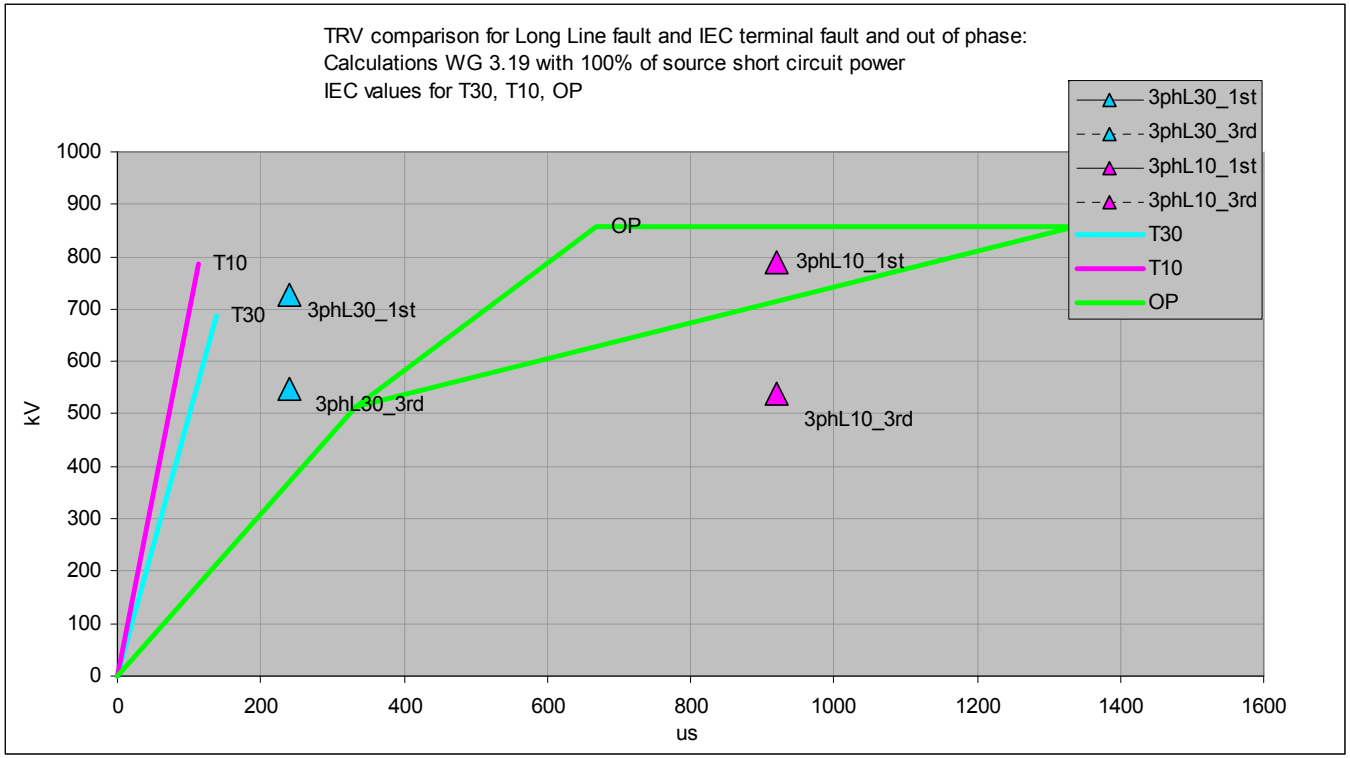

Comparison with TRV withstand capability demonstrated by T10, T30 and OP (out-of-phase)

GRID | ALSTOM

Three-Phase Line Faults

- Example 3: L30 and L10 in 420kV/63kA network with 80% short-circuit power source

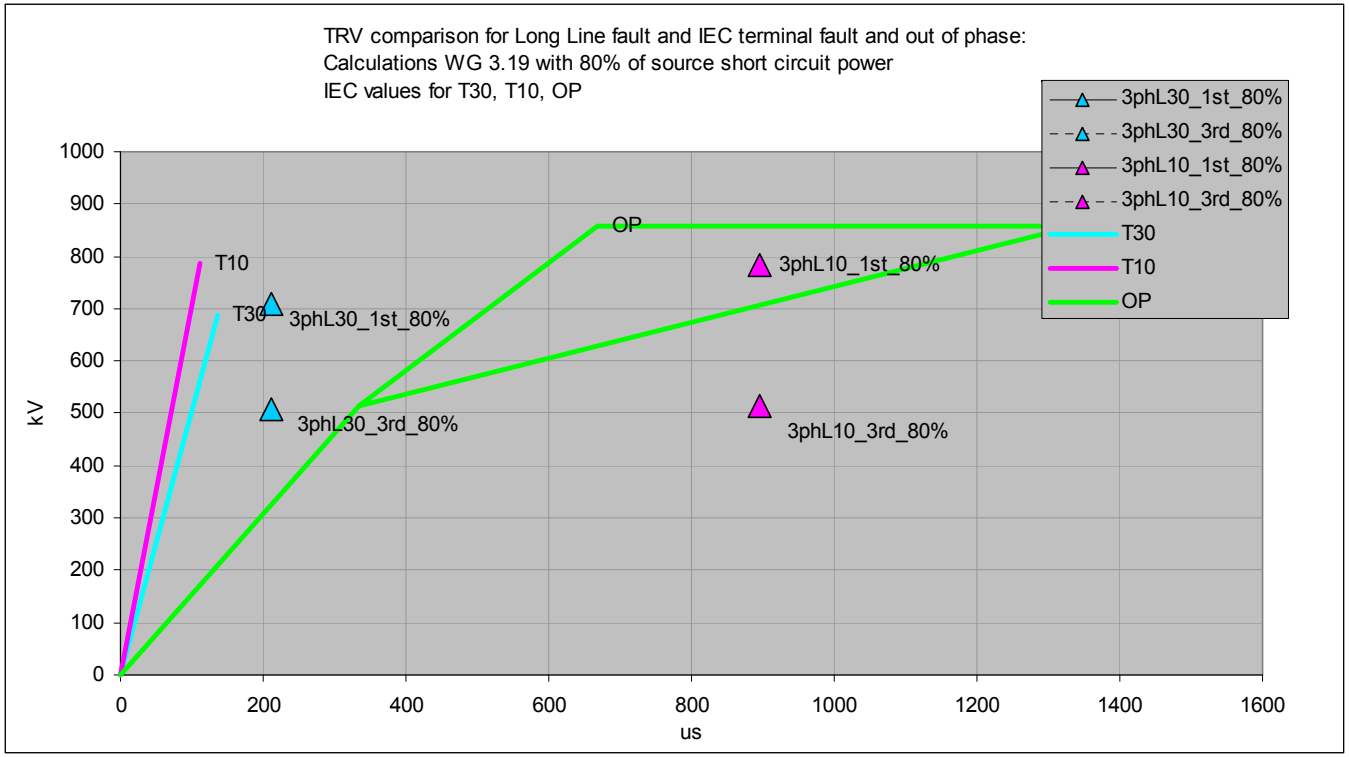

Comparison with TRV withstand capability demonstrated by T10, T30 and OP (out-of-phase)

GRID | ALSTOM

Three-Phase Line Faults

- Example 4: 3-phase SLF with 75% Isc (Isc= 40 kA) with source having a short-circuit current of 40kA or 32 kA

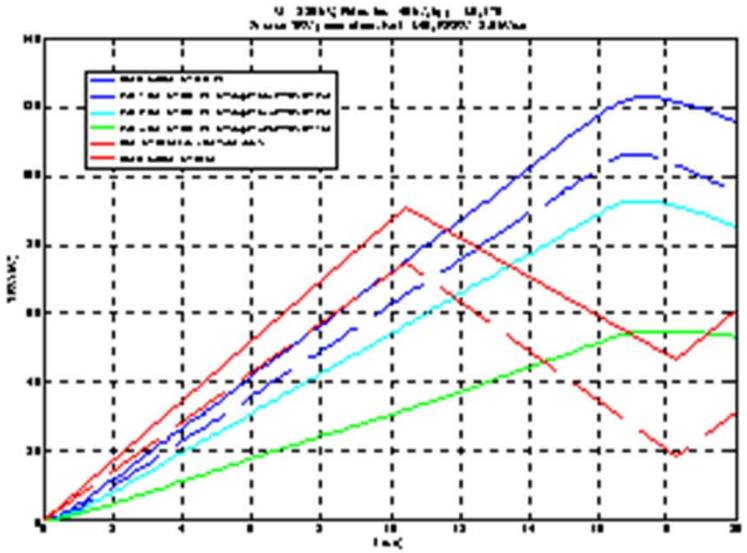

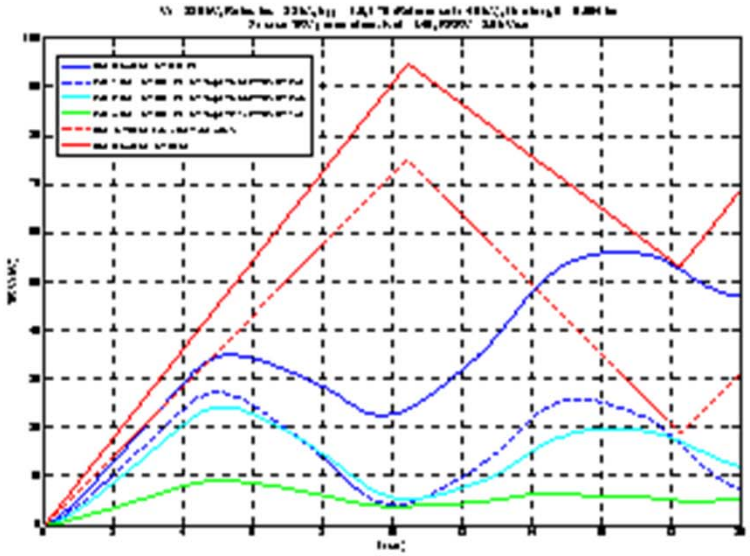

For a given fault current, the TRV (blue curve) is strongly dependent on the short-circuit power of the source.

Three-Phase Short-Line Faults

- SLF test duties prove the circuit-breaker's capability to interrupt a high short-circuit current with a steep rate-of-rise of recovery voltage (RRRV or du/dt).

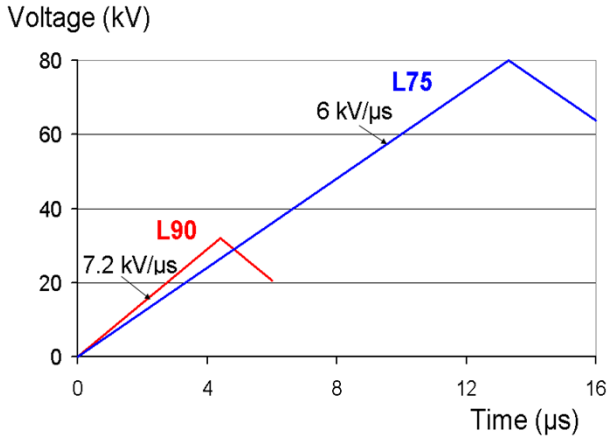

- The short-line fault breaking capability in IEC 62271-100 and IEEE is demonstrated by single-phase tests performed with a line that has a surge impedance (Z) of 450 Ω.
- Z = 450 Ω has been chosen to cover the RRRV in all cases of SLF.
- SLF requirements were first introduced in 1971. They were based on a basic study by CIGRE SC3 in 1963. All types of SLF (1-phase and 3-phase) were already considered.
- The validity of the SLF requirements was confirmed afterwards by almost 40 years of experience.

GRID | ALSTOM

Three-Phase Short-Line Faults

- The first peak of TRV seen by the first-pole-to-clear during interruption of a three-phase SLF (U_{L3}), could exceed the standard value in some cases. However the following needs to be considered:
- U_{L3} is associated with a lower RRRV than standardized and it is recognized that RRRV is the most severe TRV parameter during SLF interruption.
- The standard RRRV is based on an equivalent surge impedance of 450 Ω that is seldom obtained in practice.
- CIGRE Technical Brochure 408 shows that U_{L3} decreases significantly when the short-circuit power of the source decreases.
- A U_{L3} that exceeds the standard value is only possible in the very low probability of cases where a three-phase fault occurs at a critical distance from the circuit-breaker and when the supply has its full short-circuit power.

Three-Phase Short-Line Faults

- The following figure is based on data from CIGRE TB 408
- It shows that the dielectric phase of TRV seen by the first pole to clear during a three-phase fault is covered by interpolating the withstands demonstrated in the standard test duties (same range of currents).

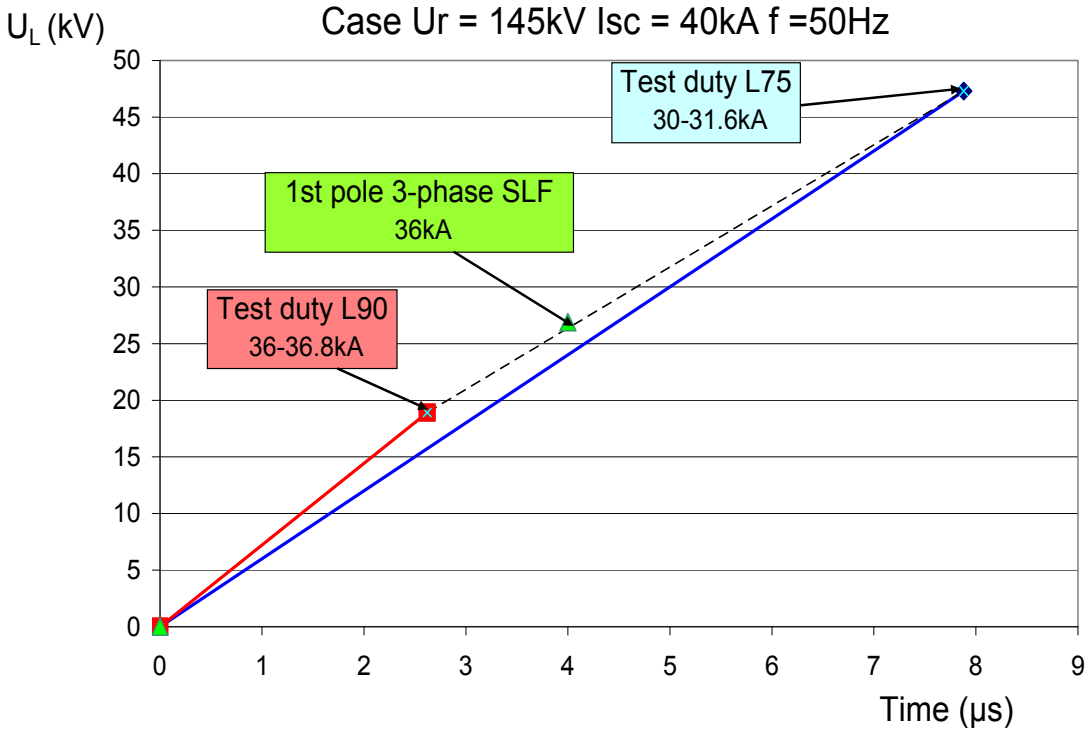

GRID | ALSTOM

Three-Phase Short-Line Faults

- All these considerations supported and still supports the choice made by IEC and IEEE to require two mandatory SLF test duties L90 and L75 performed single-phase with respectively 90% and 75% of rated short-circuit current

  (with an option in IEC to perform a test duty L60 when arcing times during L75 are significantly longer than during L90).

- These test duties performed single-phase demonstrate an interrupting window of arcing times of 180°- ε , the largest possible for any type of fault.

- Conclusion: there is no need to change the requirements for SLF tests duties L90 and L75 in international standards.

Shunt Reactor Switching

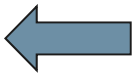

ALSTOM

Switching of Inductive Loads (Shunt Reactors)

- Interruption of shunt reactors currents
  - Interruption of small inductive currents
  - Current chopping
  - Multiple reignitions
  - Synchronized tripping
  - Breaking tests

Switching of Inductive Loads (Shunt Reactors)

Interruption of small inductive currents

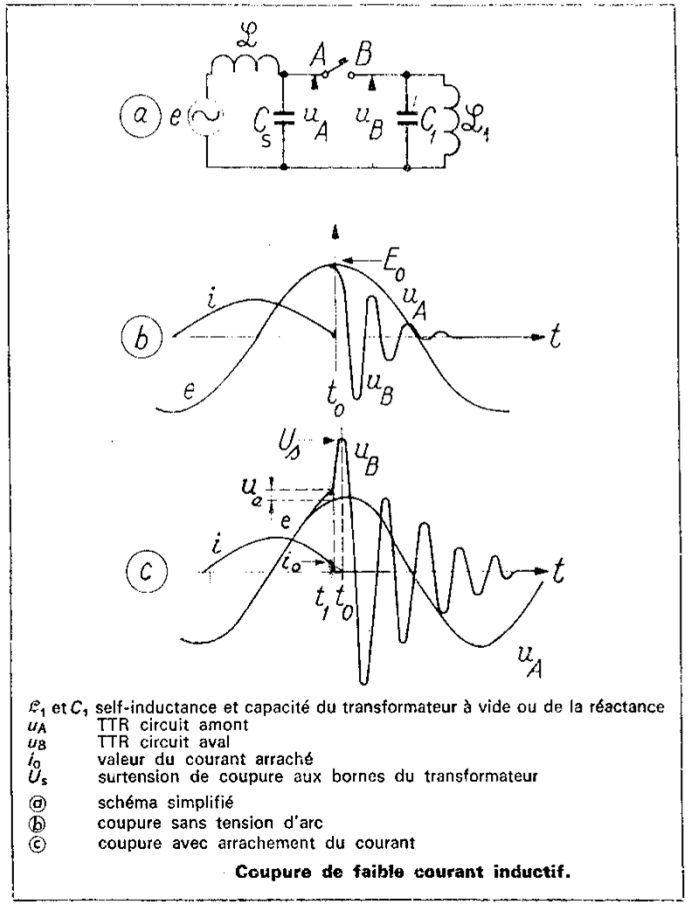

L_1 et C_1 self-inductance et capacité du transformateur à vide ou de la réactance
u_A TTR circuit amont
u_B TTR circuit aval
i_0 valeur du courant arraché
U_s surtension de coupure aux bornes du transformateur
ⓐ schéma simplifié
ⓑ coupure sans tension d'arc
ⓒ coupure avec arrachement du courant

Coupure de faible courant inductif.

- Interruption of small inductive currents is obtained during switching of
  - shunt reactance,
  - no-load transformers,
  - medium voltage motors.
- The figure give a representation of a single-phase circuit for small inductive current switching.
- The load is represented by its inductance L_t and its capacitance to ground C_t

GRID | ALSTOM

Switching of Inductive Loads (Shunt Reactors)

Current chopping

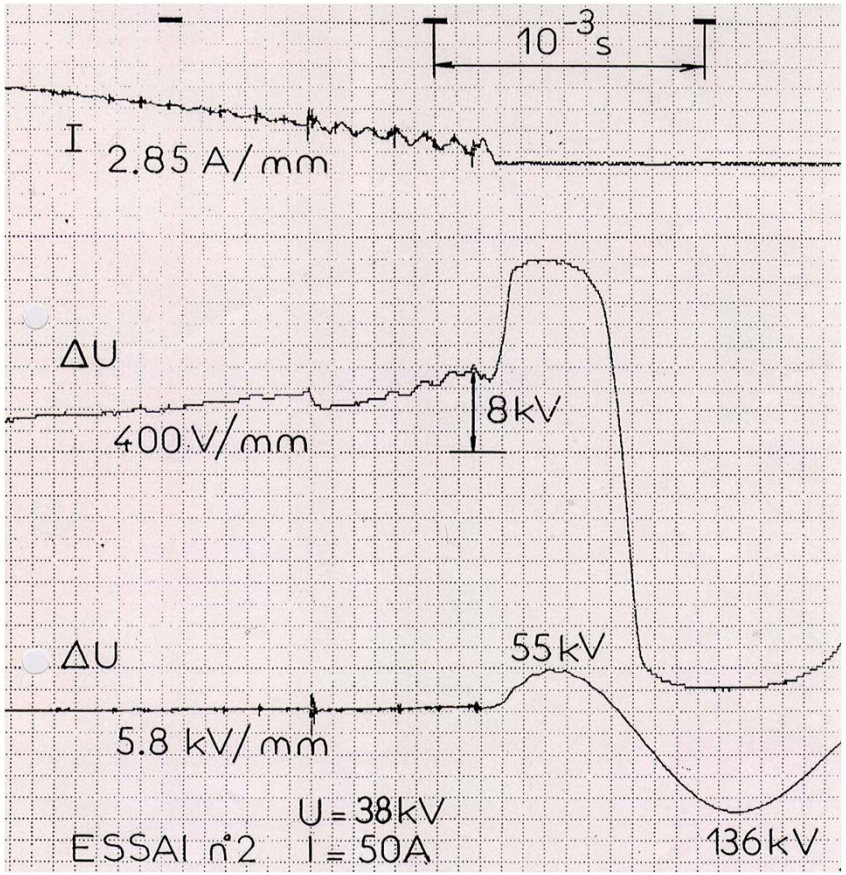

When an arc of small intensity is submitted to a powerful blast, it can be unstable as it interacts with the circuit connected at its terminals.

Oscillations lead to a premature current zero: current is chopped

Current chopping produces an overvoltage on the load side of the circuit-breaker.

GRID | ALSTOM

Switching of Inductive Loads (Shunt Reactors)

Current chopping: Current-Voltage characteristic

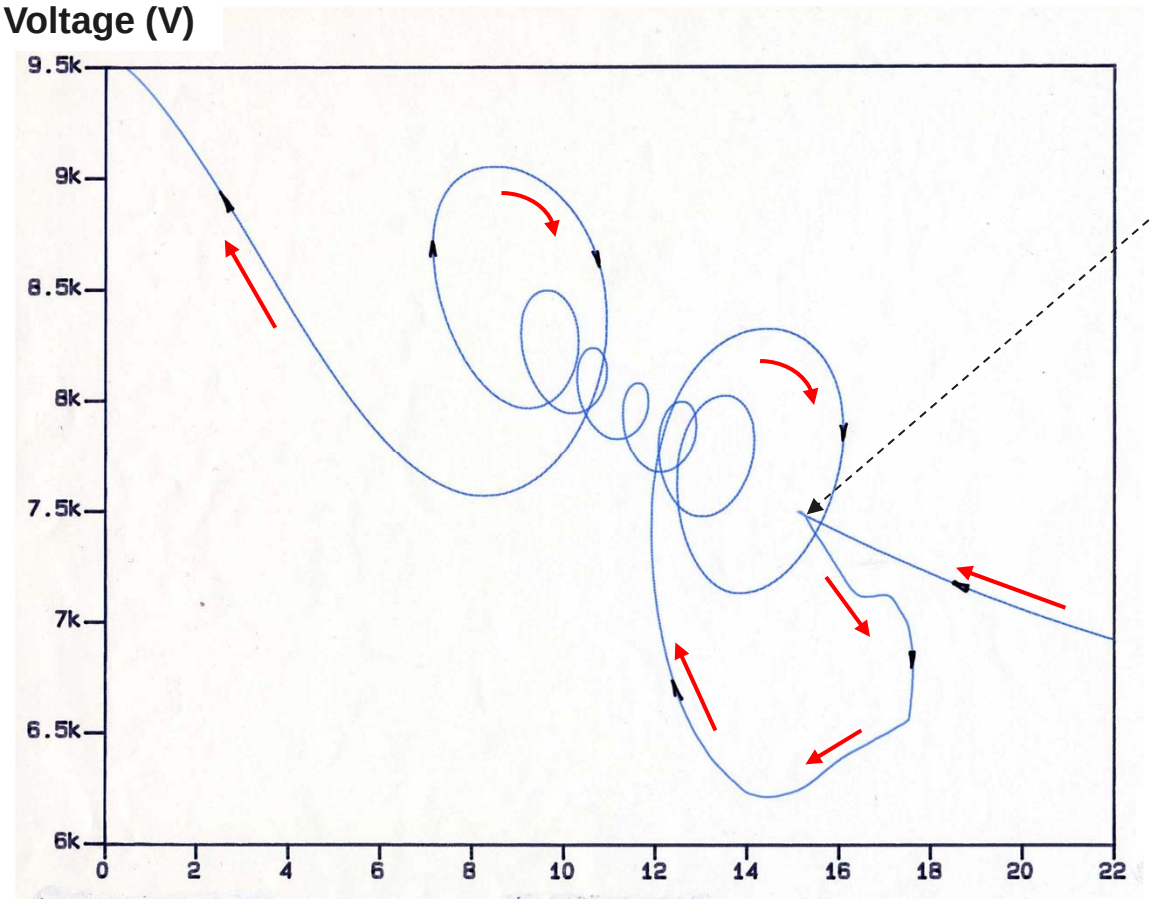

Current oscillations initiated by a disturbance (arc voltage drop), are

- initially damped,
- later amplified when the arc acts like a negative impedance

GRID | ALSTOM

Switching of Inductive Loads (Shunt Reactors)

- Chopped current is given by $Io = Ko\sqrt{C}$

with K_o chopping number

C equivalent capacitance of the circuit

- If arc voltage and damping are neglected, the overvoltage factor is given by :

$$S = \sqrt{1 + \frac{L_t \, i_o^{\,2}}{E_o^{\,2} \, C_L}}$$

with E_o voltage at interruption time

L_t inductance of load circuit

C capacitance of load circuit

GRID | ALSTOM

Switching of Inductive Loads (Shunt Reactors)

Multiple reignitions

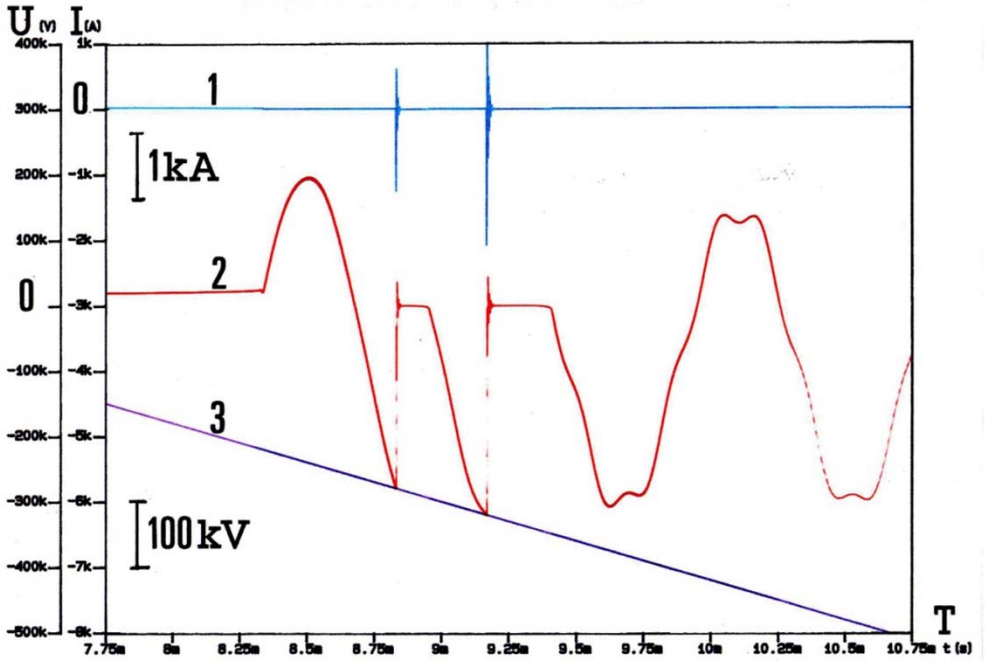

1 Current
2 TRV
3 Voltage withstand between contacts

When the natural frequency of the TRV is high, reignitions cannot be avoided as the circuit breaker tries to interrupt with short arcing times i.e. with a small distance between contacts.

Reignitions occur until the contact distance is sufficient to withstand the TRV.

Fast voltage changes can endanger the insulation of transformers in series with the circuit breaker.

GRID | ALSTOM

Switching of Inductive Loads (Shunt Reactors)

Multiple reignitions

TRV during a test with multiple reignitions

Reignitions can produce overvoltages on the supply side and load side

GRID | ALSTOM

Switching of Inductive Loads (Shunt Reactors)

- The maximum allowable level of overvoltage is less than 2 in high-voltage networks, therefore several techniques were developed to guarantee that the required level of overvoltage is not exceeded:
  - use of varistors phase-to-ground and in parallel to circuit-breakers,
  - breaking with opening resistors (in air blast circuit breakers).
  - synchronized opening of a circuit breaker, where the arcing time is in a given range such that there won't be reignitions or high current chopping.

Today the best solution is synchronized opening.

Switching of Inductive Loads (Shunt Reactors)

Synchronized opening

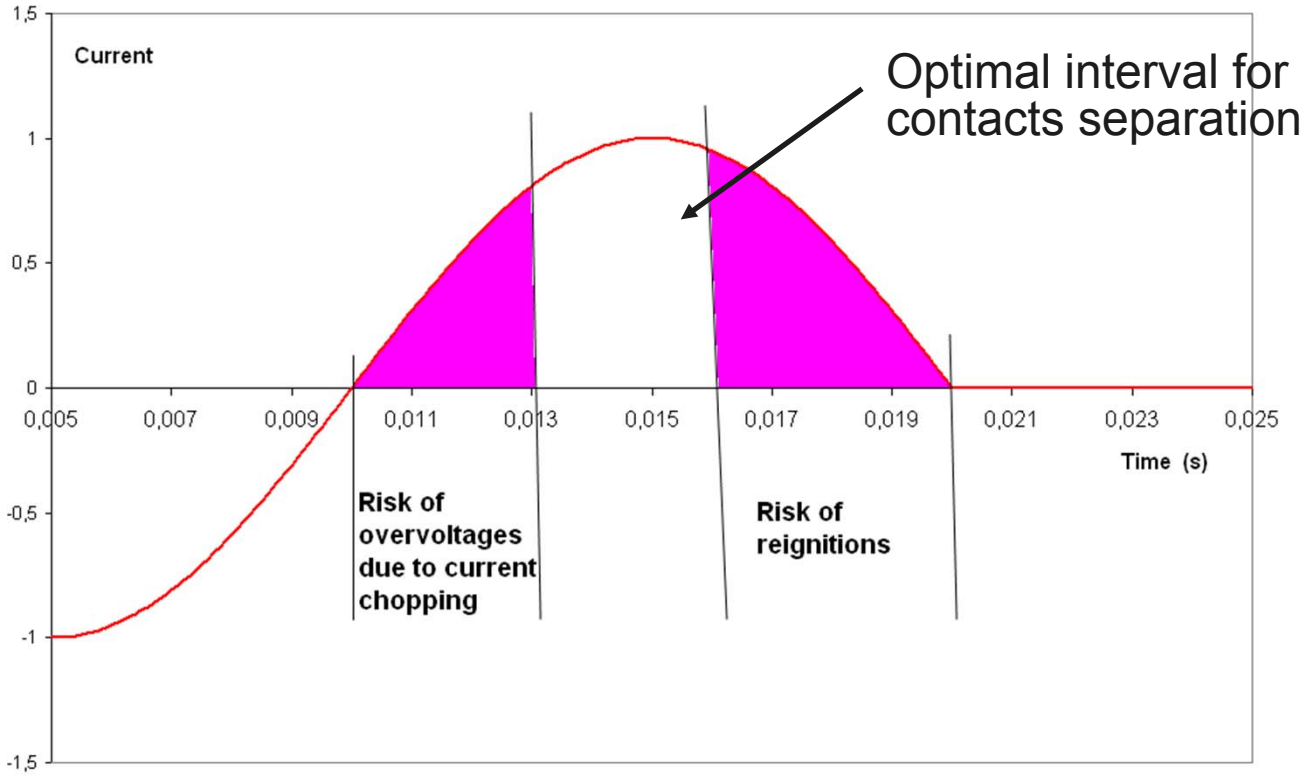

GRID | ALSTOM

Switching of Inductive Loads (Shunt Reactors)

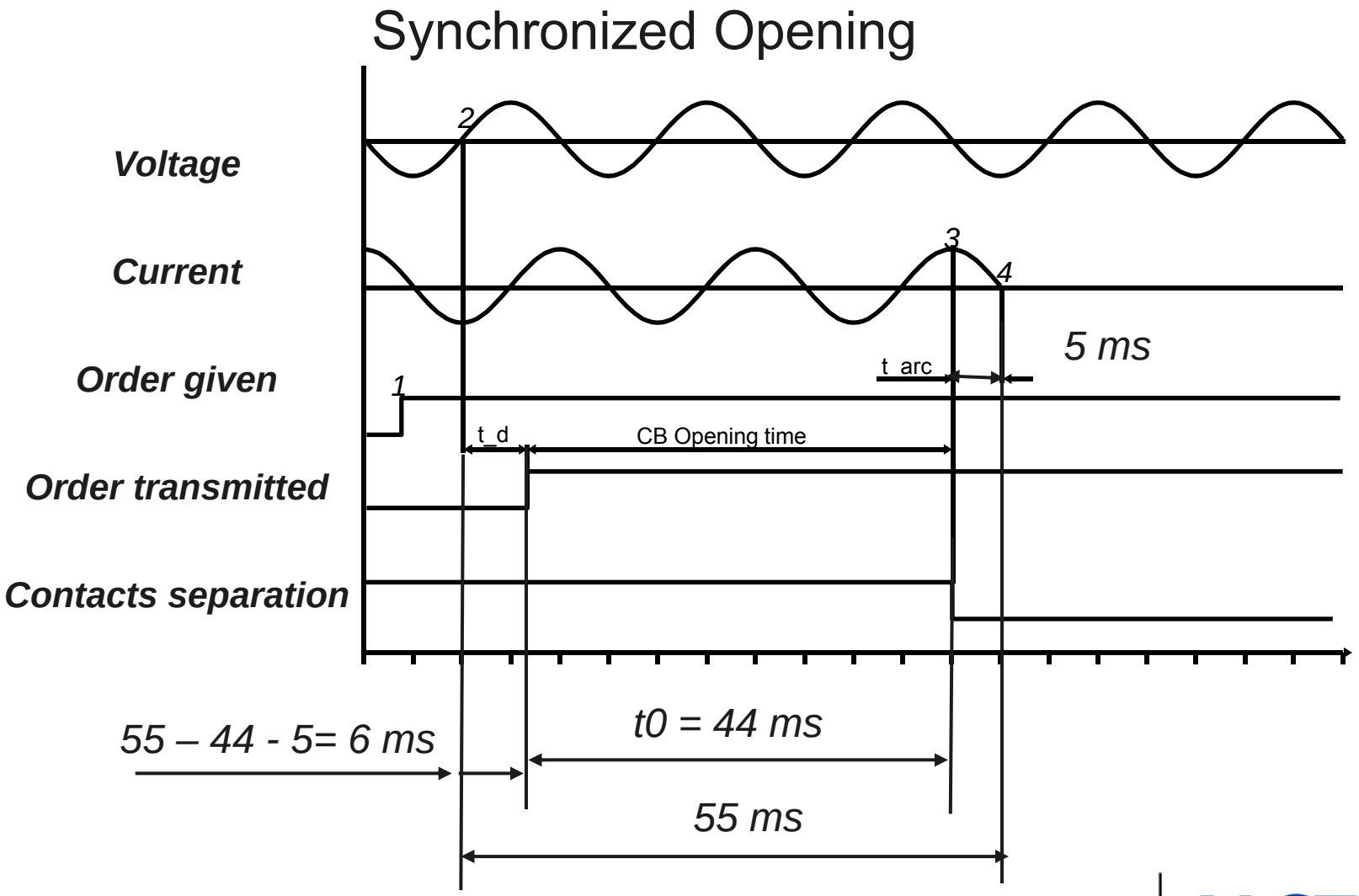

GRID | ALSTOM

Switching of Inductive Loads / Standards

- Standard/Guide for inductive load switching
  - IEC 62271-110 – Inductive load switching
  - IEEE C37.015 – Guide for the Application of Shunt Reactor Switching
- Technical Report on controlled switching
  - IEC 62271-302 – Alternating current circuit-breakers with intentionally non-simultaneous pole operation

Transformer Limited Faults

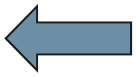

ALSTOM

Transformer Limited Faults / Content

Part 1

Introduction

Options for specification (IEEE C37.011-2011)

Part 2

TLF TRV for EHV & UHV Circuit Breakers

TLF TRV / Introduction

Severe TRV (Transient Recovery Voltage) may occur when a short-circuit current is fed or limited by a transformer without any appreciable capacitance between the transformer and the circuit breaker.

These faults are called

Transformer Limited Faults

(TLF).

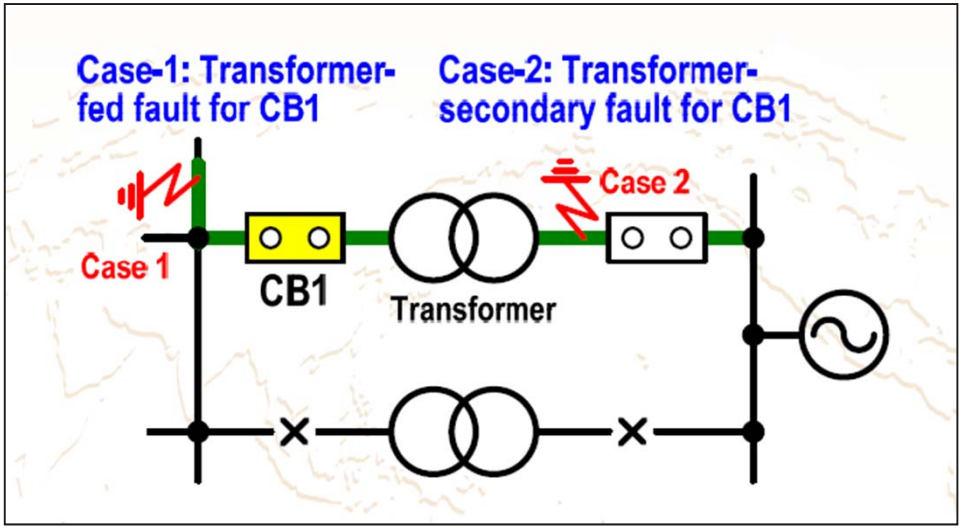

In such case, the rate-of-rise of recovery voltage (RRRV) exceeds the values specified in the standards for terminal faults.

TLF / Options for Specification

- As explained in IEEE C37.011-2011 (Guide for the Application of TRV for AC High-Voltage Circuit Breakers), the user has several basic possibilities
  1. Specify a fast TRV for TLF with values taken from standards or guides (e.g. ANSI C37.06.1),
  2. Specify a TRV calculated for the actual application taking into account
     - the natural frequency of the transformer,
     - and/or (depending on the knowledge of system parameters) additional capacitances present in the substation, sum of stray capacitance, busbar, CVT etc
  3. Add a capacitor to reduce the RRRV

TLF / Options for Specification

- **Option 1**: Specify a fast TRV for TLF with values taken from Guides (e.g. ANSI C37.06.1)
  - ANSI Guide C37.06.1 is assumed to cover the large majority of all cases for this switching duty.
  - TLF TRVs are given for two fault currents: 7% and 30% of rated short-circuit current.
  - They are based on the assumption of a negligible capacitance between the circuit breaker and the transformer.

TLF / Options for Specification

- **Option 1 (Cont'd)**: TRV values in ANSI C37.06.1

Table 3B–Transient recovery voltage ratings fast time-to-peak (T_2) values for definite purpose circuit breakers 123 kV and above

Line	Rated Maximum Voltage kV, rms (1)	Rated Voltage Range Factor (1)	Rated Short-Circuit and Short-Time Current kA, rms (1)	Rated Transient Recovery Voltage (1)		Definite Purpose TRV Parameters at 30% of Rated Short-Circuit Current			Definite Purpose TRV Parameters at 7% of Rated Short-Circuit Current		
				Peak Voltage E_2 kV, peak	Time to Peak T_2 µsec	Current kA, rms	Peak Voltage kV, peak	Time to Peak µsec	Current kA, rms	Peak Voltage kV, peak	Time to Peak µsec
No.	Col 1	Col 2	Col 3	Col 4	Col 5	Col 6	Col 7	Col 8	Col 9	Col 10	Col 11
1	123	1.0	20	216	275	6	245	28.3	1.4	253	48.7
2	123	1.0	40	216	260	12	245	23.5	2.8	253	36.5
3	123	1.0	63	216	260	19	245	21.4	4.4	253	31.0
4	145	1.0	20	255	330	6	288	30.9	1.4	299	53.4
5	145	1.0	40	255	310	12	288	25.8	2.8	299	40.0
6	145	1.0	63	255	310	19	288	23.5	4.4	299	34.0
7	145	1.0	80	255	310	24	288	22.6	5.6	299	31.2
8	170	1.0	16	299	395	8	338	35.2	1.1	350	63.4
9	170	1.0	31.5	299	360	9.5	338	29.1	2.2	350	47.0
10	170	1.0	40	299	360	12	338	27.8	2.8	350	43.2
11	170	1.0	50	299	360	15	338	26.4	3.5	350	35.7
12	170	1.0	63	299	360	19	338	25.4	4.4	350	36.7
13	245	1.0	31.5	431	520	9.5	487	34.8	2.2	505	56.2
14	245	1.0	40	431	520	12	487	33.3	2.8	505	51.6
15	245	1.0	50	431	520	15	487	31.6	3.5	505	47.4
16	245	1.0	63	431	520	19	487	30.3	4.4	505	43.8
17	362	1.0	40	637	775	12	720	40.7	2.8	745	63.2
18	362	1.0	63	637	775	19	720	37.1	4.4	745	55.7
19	550	1.0	40	968	1325	12	1094	49.0	2.8	1133	76.1
20	550	1.0	63	968	1325	19	1094	44.7	4.4	1133	63.9
21	800	1.0	40	1408	1530	12	1591	60.7	2.8	1647	94.1
22	800	1.0	63	1408	1530	19	1591	55.3	4.4	1647	79.9

TLF / Options for Specification

- Explanation on TRV value in ANSI C37.06.1

Case: U_r = 362 kV , I_{sc}= 63 kA, I_{TLF} = 7% I_{sc}

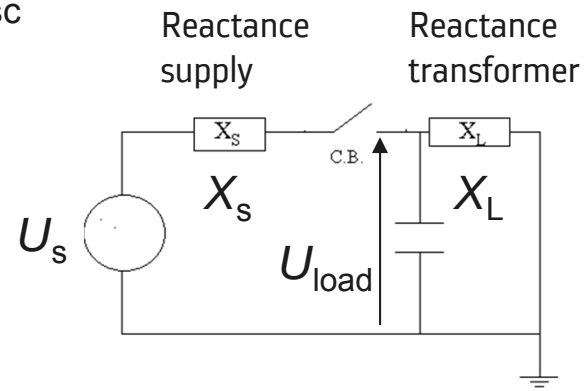

- Load voltage at the time of interruption

$$U_S = (X_S + X_L) \times 0.07\, I_{SC} = X_S \times I_{SC}$$

$$0.07\, X_L = 0.93\, X_S \qquad X_L = \frac{0.93}{0.07} X_S$$

$$U_{load} = X_L \times 0.07\, I_{SC} = 0.93\, X_S\, I_{SC} = 0.93\, U_S$$

- TRV peak (neglecting the contribution on the supply side)

$$U_c = k_{af} \times \sqrt{2} \times U_{load} = k_{af} \times \sqrt{2} \times 0.93 \times k_{pp} \times \frac{U_r}{\sqrt{3}}$$

with k_{pp} = 1.5 (assumed in ANSI C37.06.1) and k_{af} = 1.8

$$U_c = 1.8 \times \sqrt{2} \times 0.93 \times 1.5 \frac{362}{\sqrt{3}} = 742\ kV$$

GRID | ALSTOM

TLF / Options for Specification

- **Option 1 (Cont'd)**: TRV values in ANSI C37.06.1

Calculation TLF TRV peak - Case 7% rated short-circuit current

Ur	Ur sqrt(2/3)	kp	kaf	kvd	Calculated Uc	ANSI C37.06.1
rated voltage	system peak phase-ground voltage	pole-to-clear factor	amplitude factor	voltage drop across transformer	TRV peak	TRV peak
kV	kV	pu	pu	pu	kV	kV
123	100,4	1,5	1,8	0,93	252,2	253
145	118,4	1,5	1,8	0,93	297,3	299
170	138,8	1,5	1,8	0,93	348,5	350

TLF / Options for Specification

- **Option 1 (Cont'd)**
  - As indicated in ANSI/IEEE Std C37.016-2006, time t_3 is given by the following equation:

$$t_3 = 0.106 \sqrt{\frac{U_r \times C}{I_{TLF}}}$$

where U_r is the rated voltage in kV, C is equal to the lumped equivalent terminal capacitance to ground of the transformer in pF, and I_{TLF} is equal to the transformer-limited fault current in kA.

C = 1480 + 89 I_{TLF} (pF) for rated voltages less than 123 kV

C = 1650 + 180 I_{TLF} (pF) for rated voltages 123 kV and above

  - For $U_r \geq 123$ kV, time t_3 can be also expressed as follows:

$$t_3 = \frac{3.18 \times \sqrt{U_r}}{I_{TLF}^{0.21}}$$

t_3 decreases (and RRRV increases) when the fault current increases.

TLF / Options for Specification

- **Option 2a** Check the actual TRV time to peak from the natural frequency of the transformer(s)

$$T_2 = \frac{1}{2 \times f_{\text{nat}}}$$

where T_2 is the time to TRV peak (= 1.15 t_3)

f_{nat} is the natural frequency of the transformer

  - If T_2 is longer than the value in ANSI C37.06.1 it may be cross-checked with available test results.
  - Determination of the transformer natural frequency can be done in several ways as explained in part 3.

TLF / Options for Specification

- **Option 2b** TRV calculation for a given application
  - Calculate the TRV for the given application, taking into account additional available capacitances or additional added capacitances i.e. line to ground capacitors, CVT's, grading capacitors etc.
  - The additional capacitance increases the time to TRV peak ($T_{2\mathrm{mod}}$) and reduces the stress for the circuit breaker according to the following equations

where

$$T_{2\,\mathrm{mod}} = \pi \sqrt{L \times (C_{\mathrm{nat}} + C_{\mathrm{add}})}$$

$$L = \frac{\frac{k_{\mathrm{pp}}}{\sqrt{3}} \times U_{\mathrm{r}}}{2\pi \times f_r \times I_{\mathrm{sc}}} \times \left(\frac{I_{\mathrm{sc}}}{I} - 1 \right)$$

$$C_{\mathrm{nat}} = (2 \times T_2)^2 / (4\pi^2 \times L)$$

GRID | ALSTOM

TLF / Options for Specification

- **Option 2b (Cont'd)**

  where

  k_{pp} is the first pole to clear factor

  U_r is the rated maximum voltage

  I_{sc} is the rated short circuit current

  I is the transformer limited fault current

  f_r is the power frequency

  L is the equivalent inductance of the transformer

  C_{nat} is the equivalent capacitance of the transformer (2/3 of the surge capacitance in case of 3-phase ungrounded fault)

  C_{add} is the equivalent additional capacitance (2/3 of the capacitance added phase to ground in case of 3-phase ungrounded fault)

TLF / Options for Specification

- **Option 2b (Cont'd) : Example**
  - Rated maximum voltage : 362 kV
  - Rated short circuit current : 63 kA
  - Based on 30% of rated short circuit current, the required test current is 18.9 kA.
  - TRV parameters as defined in ANSI C37.06.1
    - T_2 = 37.1 µs u_c = 720 kV
  - The equivalent inductance and capacitance of the transformer are derived using previous equations
    - L = 30.7 mH C_{nat} = 4.54 nF
  - Taking into account additional (equivalent) capacitances present in the substation (sum of stray capacitance, busbar, CVT etc.) of 3.5nF, the modified time to peak T_{2mod} is equal to 49 µs. This T_{2mod} would be the shortest time to peak TRV that the breaker has to withstand in service and during testing.

TLF / Options for Specification

- **Option 3** Additional capacitor
  - Test reports may be available for the circuit breaker showing a certain T_2 value which is higher than the T_2 value given in ANSI C37.06.1.
  - Such a breaker could be used for this application by adding a capacitor to ground which changes the actual T_2 to a value where a proof for the circuit breaker capability exists.

$$C_{\text{add}} = \frac{T_{2\ \text{test}}^{2}}{L \times \pi^{2}} - C_{\text{nat}}$$

    where $T_{2\ \text{test}}$ value is the time to peak of tested TRV.
  - If for example, a circuit breaker has been tested with a time $T_{2\ \text{test}}$ of 70 µs, a current equal to 30 % of its rated short circuit current of 63kA and a rated maximum voltage of 362 kV, this would require an additional capacitance of 11.6 nF in order to make the breaker feasible for this application.

Transformer Limited Fault TRV for EHV & UHV Circuit Breakers

Denis Dufournet (Alstom Grid)

Paper for ISH 2013 Conference, Seoul, August 2013

GRID

Paper co-authored by Joanne Hu (RBJ Engineering) and Anton Janssen (Liander)

ALSTOM

TLF TRV for EHV & UHV Circuit Breakers

1. Introduction
2. TLF TRV Peak Calculation
3. TLF RRRV Calculation
4. Application to EHV Circuit Breakers (Standardization in IEEE)
5. Application to UHV Circuit breakers (Standardization in IEC)
6. Conclusion

TLF TRV / Introduction

- Recent studies on TLF TRVs by
  - CIGRE WG A3 22/28 for EHV and UHV circuit breakers
    - Technical Brochures 362 (2008) and 456 (2011)
    - New Technical Brochure to be published end of 2013
  - IEC SC 17A for UHV circuit breakers
    - Standard values in Edition 2.1 of IEC 62271-100 (2012)
  - IEEE WG C37.011 "Application Guide for TRV for AC High-Voltage Circuit Breakers" (2011)
    - Different options available to evaluate if a circuit breaker is suitable for an application with TLF condition.

TLF TRV / Introduction

- TLF conditions for EHV and UHV circuit breakers

UHV Circuit Breaker in UHV/EHV S/S

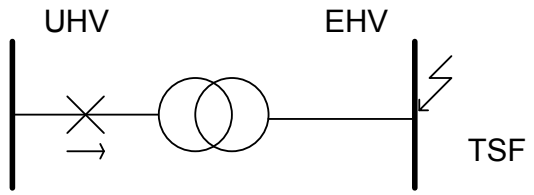

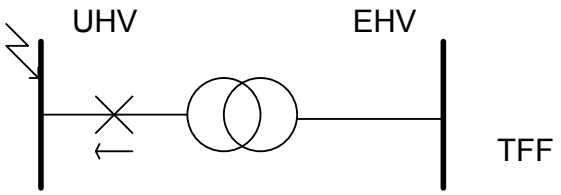

EHV Circuit Breaker in UHV/EHV S/S

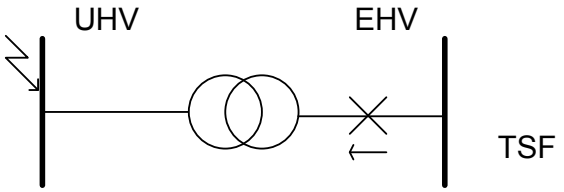

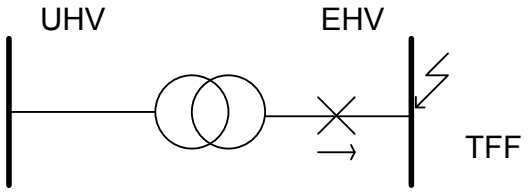

EHV Circuit Breaker in EHV/HV S/S

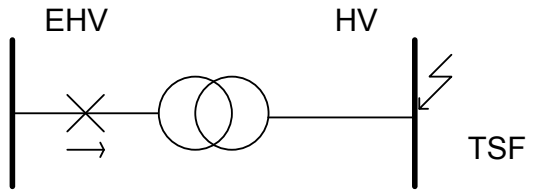

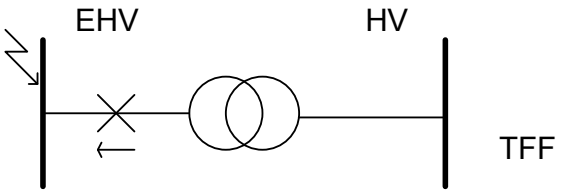

TLF: Transformer secondary faults (TSF) and transformer fed faults (TFF)

GRID | ALSTOM

2 – TLF TRV Peak Calculation

Pole-to-clear factor, Amplitude Factor & Voltage Drop Ratio

ALSTOM

TLF TRV Peak / Pole-to-clear factor

- The TRV peak is function of 3 factors as shown in the following equation

$$U_c = k_p \times k_{af} \times k_{vd} \times \frac{U_r \sqrt{2}}{\sqrt{3}}$$

k_p = pole-to-clear factor, k_{af} = amplitude factor, k_{vd} = voltage drop across the transformer, U_r = rated voltage

- Pole-to-clear factor
  - On the EHV or UHV side the transformer neutral is effectively grounded. Since the transformer impedance is dominant, pole-to-clear factors are between 1.0 and 1.15 at maximum.
  - A conservative value of **1.2** was adopted by IEC for UHV.
  - For EHV a conservative value of **1.3** covers the need.

TLF TRV Peak / TRV Amplitude Factor

- From the initial part of a FRA-measurement an equivalent inductance can be determined.
- In the higher frequency region (some hundreds of kHz) the equivalent capacitance can be approached.

Transformer 315 MVA, 400 kV

L = 0.2 H, C = 940 pF

R = 65 kΩ, F = 11.6 kHz

Z = 14.6 kΩ, R/Z = 4.45

kaf = 1.7

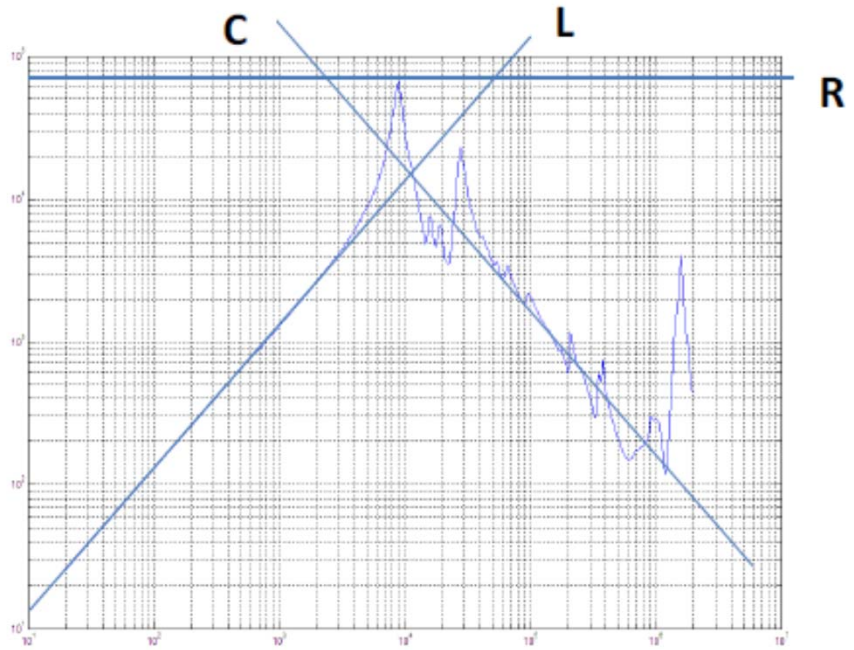

TLF TRV Peak / TRV Amplitude Factor

- From *L* and *C* values both a TRV frequency can be determined and an equivalent value Z.
- A representation by a simple single frequency model gives the highest amplitude factor, as the multiple frequencies of a more complicated model tend to decrease the overall amplitude factor.
- The ratio between the highest peak of the FRA-impedance measurement and this value Z determines the amplitude factor.
- A ratio R/Z of 5, as found in the example studied by WG A3-28, gives an amplitude factor of 1.73.
- IEC adopted **1.7** for UHV circuit breakers.
- A conservative value of value of **1.8** could be standardized for EHV circuit breakers.

TLF TRV Peak / Voltage Drop Ratio

- In IEC & IEEE standards, the voltage drop ratio is assumed to be 0.9 for terminal fault test duty T10.
- The voltage drop ratio is function of the ratio of TLF current and the bus short-circuit current minus the contribution from the faulted transformer ($I_{p\text{-}net}$)

Considering the circuit breaker at the primary side, the voltage drop in case of a transformer secondary fault (TSF) is

$$\Delta V = 1 - \frac{I_{p-TSF}}{I_{p-net}}$$

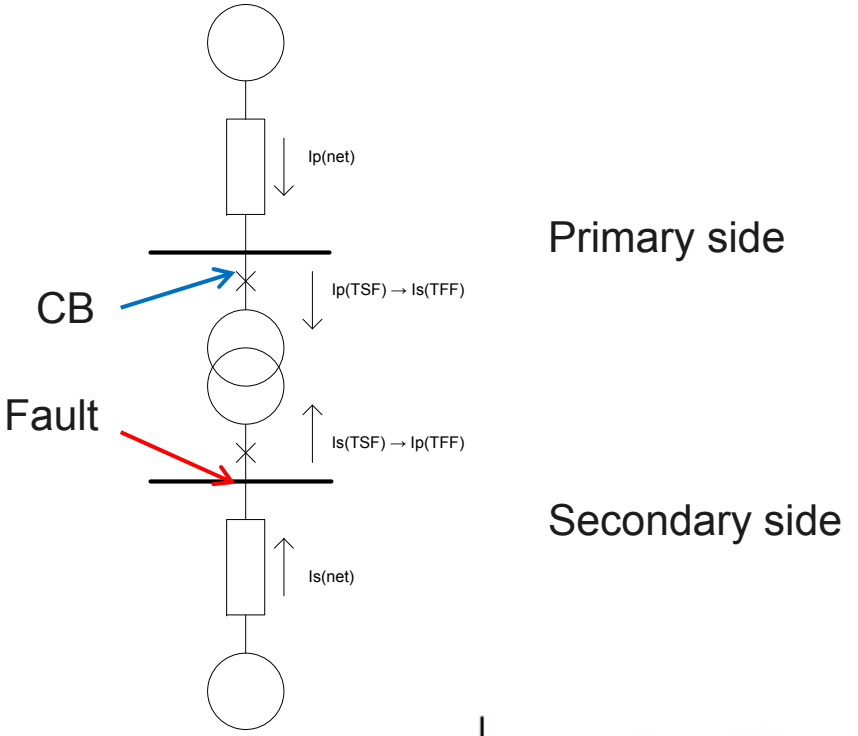

GRID | ALSTOM

TLF TRV Peak / Voltage Drop Ratio

- Based on the previous equation, the voltage drop can be expressed as function of the ratio TLF fault current divided by rated short-circuit current (in percentage), assuming different possible values of the bus short-circuit current

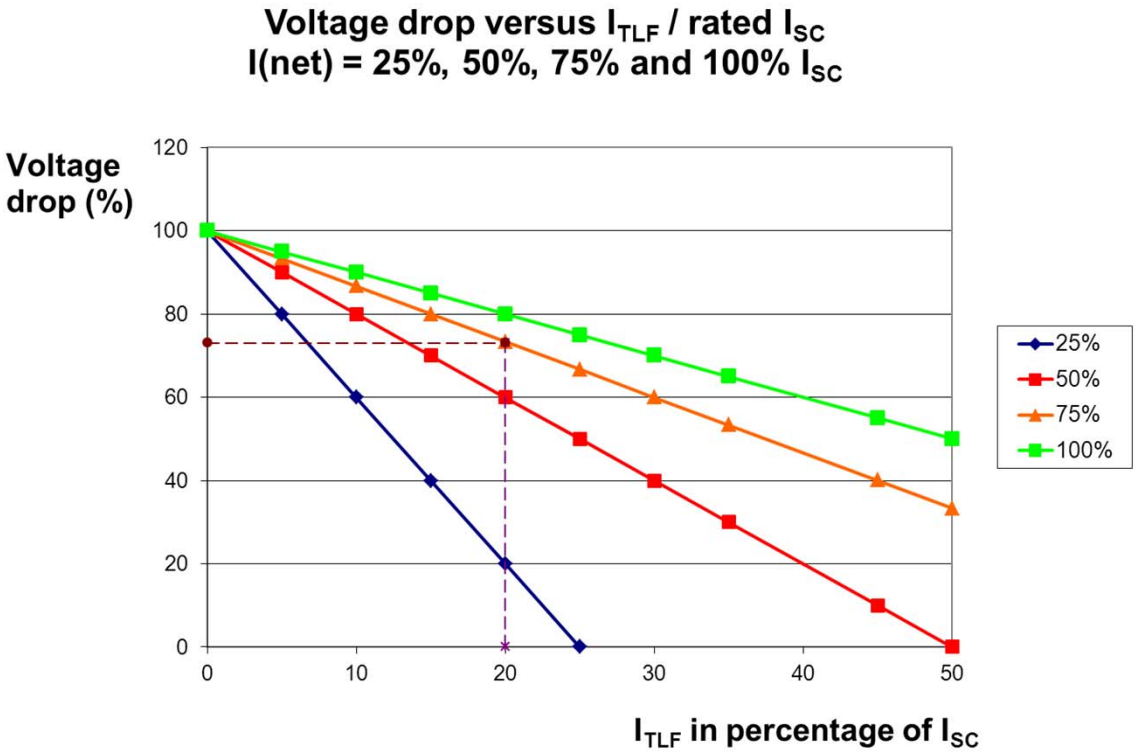

GRID | ALSTOM

TLF TRV Peak / Voltage Drop Ratio

- CIGRE WG A3.28 has done a survey of voltage drop values for EHV and UHV. Results for 550kV in Japan (TEPCO) are given below. The maximum value is 72%.
- First results for EHV show that for TLF currents in the range 25-30% Isc, the voltage drop is close to 70% (or voltage factor = 0.7).

Voltage drop in %

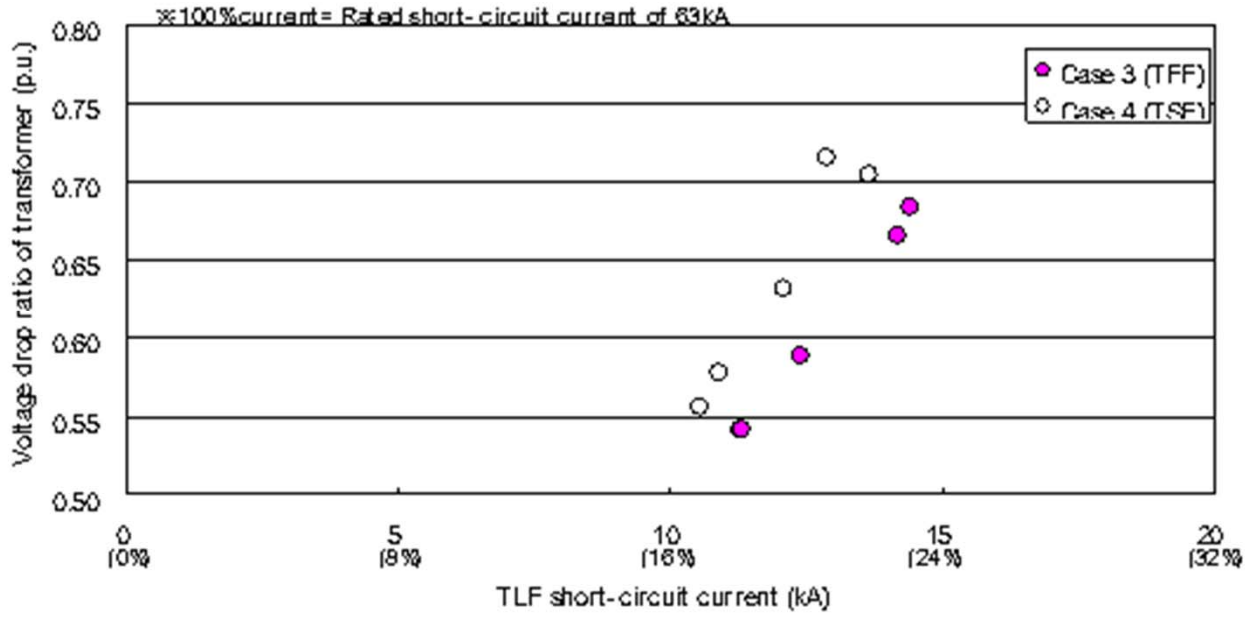

GRID | ALSTOM

3 – TLF RRRV Calculation

TLF RRRV Calculation

- The rate of rise of recovery voltage (RRRV) can be calculated from the TRV peak u_c and time t_3

$$RRRV = \frac{u_c}{t_3}$$

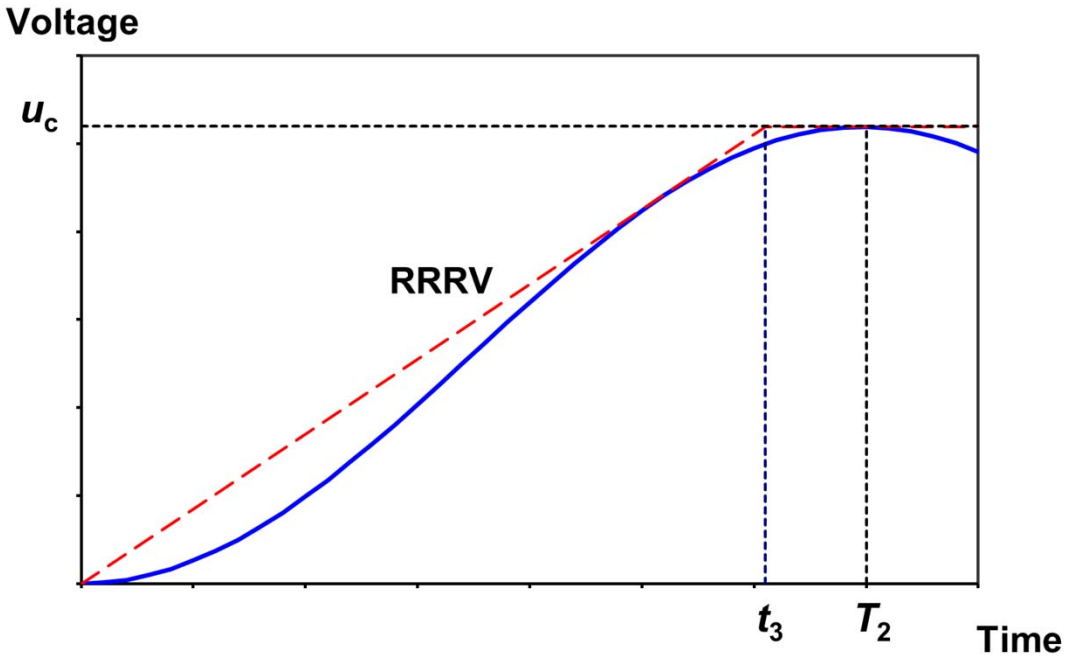

- Time t_3 is derived from T_2 = ½ F_R, with F_R = TRV frequency
- TRV frequency from measurement (e.g. FRA) and calculation (additional capacitances)

GRID | ALSTOM

4 – Application to EHV Circuit Breakers

(Standardization in IEEE)

TLF TRV for EHV Circuit Breakers

- TRV peak can be calculated as shown previously with:
  - First pole to clear factor = 1.3
  - Voltage drop ratio = 0.9 (10% Isc) and 0.7 (30% Isc)
  - Amplitude factor = 1.8
- TRV time to peak and time t_3
  - In IEEE a “1-cos” waveshape is assumed for the TRV
  - It follows that t_3 is 0.88 T_2
  - In a first step in IEEE, TRV time to peak (T_2) from ANSI C37.06.1 could be used
- Rate-of-rise-of-recovery-voltage (RRRV)
  - RRRV is TRV peak (u_c) divided by t_3

TLF TRV for EHV Circuit Breakers

- Application to standard values in IEEE

TRV peak and RRRV for I_{TLF} = 18.9 kA (30% of 63 kA) and rated voltages 245kV to 800kV

U_r	I_{SC}	I_{TLF}	u_c	Time T_2	Time t_3	RRRV
kV	kA	kA	kV	µs	µs	kV/µs
245	63,0	18.9	327,7	30.3	27	12,1
362	63,0	18.9	484,1	37.1	33	14,7
550	63,0	18.9	735,6	44.7	39	18,9
800	63,0	18.9	1069,9	55.3	49	21,8

Note: $u_c = 1.3 \times 1.8 \times 0.7 \times \frac{U_r \sqrt{2}}{\sqrt{3}}$ and T_2 is taken from ANSI C37.06.1

GRID | ALSTOM

5 – Application to UHV Circuit Breakers

(Standardization in IEC)

ALSTOM

Standardization of TLF for UHV in IEC 62271-100

- Transformer limited fault (TLF) is covered in Annex M.
- Clause M.4 is for rated voltages higher than 800kV
  - The system TRV can be modified by a capacitance and then be within the standard TRV capability envelope. As an alternative, the user can choose to specify a rated transformer limited fault (TLF) current breaking capability.
  - The rated TLF breaking current is selected from the R10 series in order to limit the number of testing values possible. Preferred values are 10 kA and 12.5 kA.
  - TRV parameters are calculated from the TLF current, the rated voltage and a capacitance of the transformer and liaison of 9 nF.
  - The first-pole-to clear-factor corresponding to this type of fault is 1.2.
  - Pending further studies, conservative values are taken for the amplitude factor and the voltage drop across the transformer. They are respectively equal to 1.7 and 0.9.

Standardization of TLF for UHV in IEC 62271-100

- TRV Table from IEC

Table M.2 – Standard values of prospective transient recovery voltage for circuit-breakers with rated voltages higher than 800 kV intended to be connected to a transformer with a connection of low capacitance

Rated voltage U_r kV	TLF fault current kA r.m.s. sym.	First-pole-to-clear factor k_{pp} p.u.	Amplitude factor k_{af} p.u.	TRV peak value u_c kV	Time t_3 µs	Time delay t_d µs	Voltage u' kV	Time t' µs	RRRV[a] u_c/t_3 kV/µs
1100	10	1.2	1,7 x 0,9	1649	107	16	550	51	15,4
1100	12,5	1,2	1,7 x 0,9	1649	96	14	550	46	17,2
1200	10	1,2	1,7 x 0,9	1799	112	17	600	54	16,1
1200	12,5	1,2	1,7 x 0,9	1799	100	15	600	48	18,0

[a] RRRV = rate of rise of recovery voltage.

See paper for detailed calculation of TRV parameters for the case 1100kV 12.5kA

6 - Conclusion

TLF - Conclusion

- Transformer-limited-faults produce fast TRVs with a high RRRV if there is a low capacitance between the transformer and the circuit-breaker.
- Options for specification are described in IEEE C37.011-2011
- RRRV is function of the TRV peak and the time to peak (related to the TRV frequency).
- TRV peak is function of several factors (pole-to-clear, amplitude factor, voltage drop across transformer) that must be properly chosen in standards.
- CIGRE WG A3-28 studied TLF TRVs and recommended parameters for TRV peak calculation.
- They can be used for the standardization of TLF TRV for EHV circuit breakers by IEC and IEEE.
- IEC has already standardized TLF TRV for UHV circuit breakers in edition 2.1 of IEC 62271-100.

Series Reactor Limited Faults

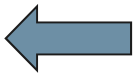

ALSTOM

Series Reactor Limited Faults

- A current limiting reactor is used to reduce a fault current magnitude. It is used also to limit inrush currents in capacitor bank applications.
- Due to the very small inherent capacitance of a number of current limiting reactors, the natural frequency of transients involving these reactors can be very high.
- A circuit-breaker installed immediately in series with such type of reactor will face a high frequency TRV
  - when clearing a terminal fault (reactor at supply side of circuit-breaker) or
  - clearing a fault behind the reactor (reactor at load side of circuit-breaker).

  The resulting TRV frequency generally exceeds by far the standardized values.

Series Reactor Limited Faults

- Example of a 38 kV Circuit Breaker that clears a 3-phase fault with a current limiting reactor (CLR) on the supply side

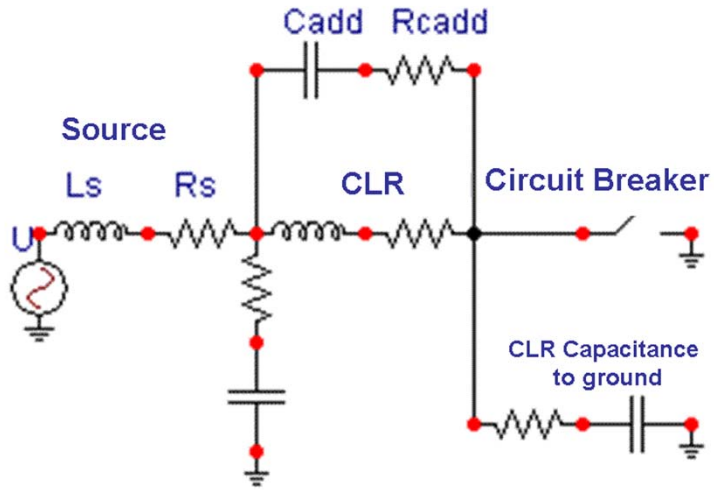

Equivalent single-phase circuit

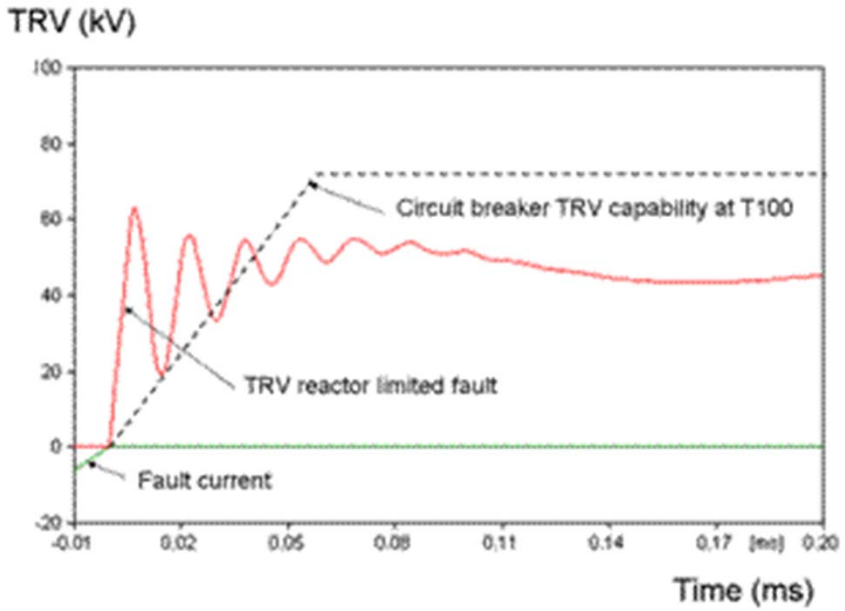

Calculated TRV: RRRV = 11.4 kV/µs

GRID | ALSTOM

Series Reactor Limited Faults

- If the system TRV exceeds a standard breaker capability, a capacitance can be added in parallel to the reactor in order to reduce the TRV frequency and have a system TRV curve within the standard capability envelope.

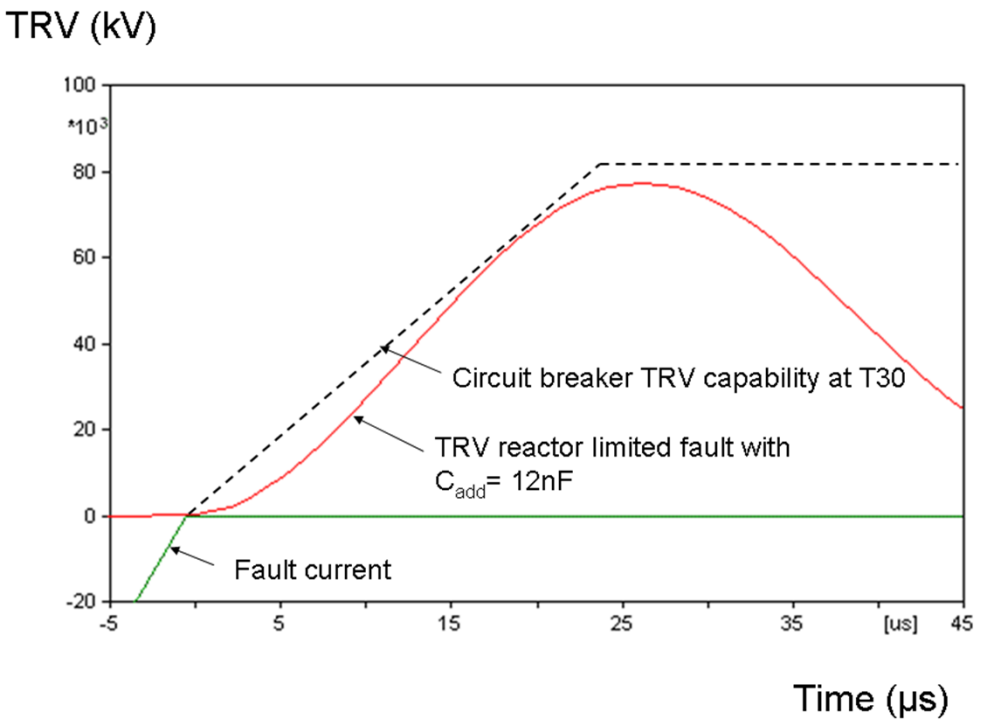

GRID | ALSTOM

Series Reactor Limited Faults

- The capacitor can also be mounted phase to ground, the effect is similar.
- This mitigation measure is very effective and cost efficient.
- IEEE C37.011-2011 gives a method to calculate by hand the TRV modified by an additional capacitor.
- In the case of a phase-to ground capacitor, assuming a rated voltage of 38kV, a short-circuit current of the supply of 50 kA and a frequency of 60 Hz, the short-circuit inductance of the source is

$$L_S = \frac{U_r}{\sqrt{3} \times I_{sc} \times 120\,\pi} = \frac{38}{\sqrt{3} \times 50 \times 120\,\pi} = 1.164\ mH$$

- As the fault current of 12.5 kA is limited by the short-circuit inductance and the CLR inductance in series:

$$L_S + L_{CLR} = \frac{38}{\sqrt{3} \times 12.5 \times 120\,\pi} = 4.658\ mH$$

- CLR inductance:

$$L_{CLR} = 4.658 - 1.164 = 3.494\ mH$$

GRID | ALSTOM

Series Reactor Limited Faults

- Equivalent CLR inductance for 3-phase fault

$$1.5\,L_{CLR} = 1.5 \times 3.494 = 5.24\,mH$$

- TRV frequency with addition of C = 12 nF

$$f_{TRV} = \frac{1}{2\,\pi\,\sqrt{1.5\,L_{CLR} \times C_{PH-G}}} = \frac{1}{2\,\pi\,\sqrt{5.24 \times 10^{-3} \times 12 \times 10^{-9}}} = \frac{10^6}{2\,\pi\,\sqrt{5.24 \times 12}}\,Hz$$

- Time to peak TRV

$$T_2 = \frac{1}{2\,f_{TRV}} = \frac{\pi\,\sqrt{5.24 \times 12}}{10^6}\ s \quad = \ 24.9\,\mu s$$

- Time t_3

$$t_3 = \frac{T_2}{1.146} = \frac{24.9}{1.146} = 21.7\,\mu s$$

- CLR contribution to TRV peak

$$U_{CLR} = 1.5\,L_{CLR} \times 120\,\pi \times I \times \sqrt{2} \times k_{af} = 5.24 \times 10^{-3} \times 120\,\pi \times 12.5 \times \sqrt{2} \times 1.9 = 66.3\,kV$$

GRID | ALSTOM

Series Reactor Limited Faults

- Source-side RRRV (rated value is 1.21 kV/μs for 50kA)

$$1.21 \times \frac{12.5}{50} = 0.3\,kV/\mu s$$

- Source-side contribution to TRV

$$0.3 \times t_3 = 0.3 \times 21.7 = 6.5\,kV$$

- Sum of CLR and source contributions

$$u_c = 66.3 + 6.5 = 72.8\,kV$$

- RRRV

$$RRRV = \frac{72.8}{21.7} = 3.35\,kV/\mu s$$

The calculated values of u_c and RRRV obtained in a simplified way compare well with those obtained by ATP simulation of the complete system, respectively 77.2 kV and 3.4 kV/μs.

GRID | ALSTOM

Influence of Series Capacitors on TRV

CIGRE WG A3-28 Study

GRID

ALSTOM

Influence of Series Capacitors on TRV

- CIGRE studies
  - Current study by CIGRE WG A3-28

    will be covered in a Technical Brochure

    (TB) that will be published end of 2013.

  - It is part of an extensive study on TRVs in EHV and UHV networks.
  - Following slides are taken from the draft TB.
  - Simulations were performed by Hiroki Ito (Chairman of CIGRE SC A3) and Hiroki Kajino (both of Mitsubishi).
  - Former study made by CIGRE WG A3.13*, reported in TB 336.

* Convenor is Anton Janssen (NL)

Influence of Series Capacitors on TRV

• Case 1: TRV for a line circuit breaker in case of 3-phase line fault with a series capacitor in the middle of the line in a 550kV system.

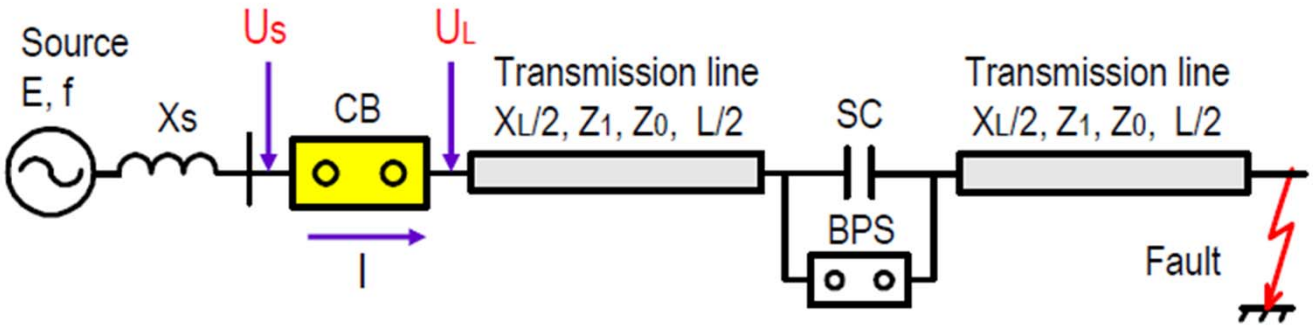

E=550 kV/√3=318 kV, f=60 Hz, Xs=6.4 ohm at 50 kA, w=2πf
Transmission line : L=360 km (180 km + 180 km), L_L=360 mH (1mH/m), X_L=136 ohm =L_1 w,
Z_1=250 ohm, Z_0=500 ohm, c=280 m/us
Series capacitor : SC=47.4 mF/phase, X_c=56 ohm

Simplified circuit of 360 km transmission line with series-capacitor

GRID | ALSTOM

Influence of Series Capacitor on TRV

- Case 1: Fault conditions & TRV with series capacitor by-passed or not (40% compensation)

	BPS opened position (with SC)		BPS closed position (without SC)
Breaking current (kA)	$I = \frac{E}{(X_s + X_L - X_c)}$	3.7	2.2
Equivalent surge impedance (ohm)	$Z_{e1} = \frac{3Z_1Z_0}{(Z_1 + 2Z_0)}$	300	300
Equivalent inductance of the line side (mH)	$L_e = (X_L - X_c)/\omega$	212	360
Peak factor of line TRV	$P.F. = \frac{Up}{Uo} = \frac{Z_{e1} \cdot 2L}{L_e \cdot c}$	3.64	2.14

The TRV peak is increased due to the trapped charge in the series capacitor.

Influence of Series Capacitors on TRV

- Case 2: 3-phase line fault in 550 kV system with parallel circuit having 40% compensation (Hydro-Quebec lines parameters)

2.1 Series-capacitor by-passed

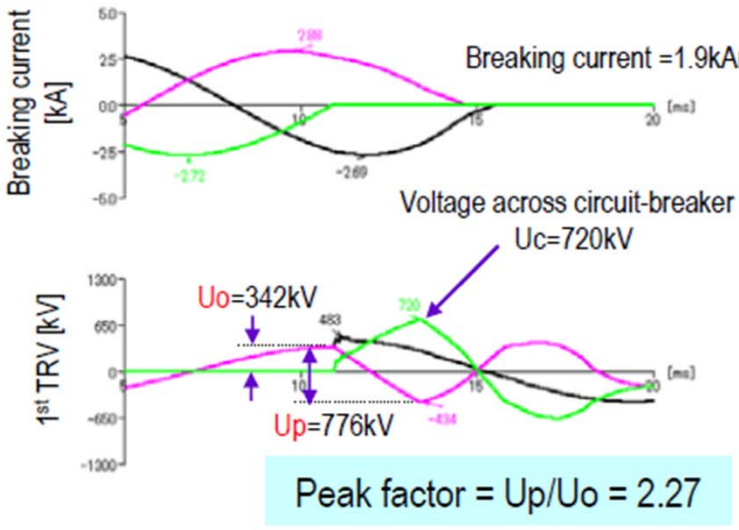

2.2 Series-capacitor not by-passed

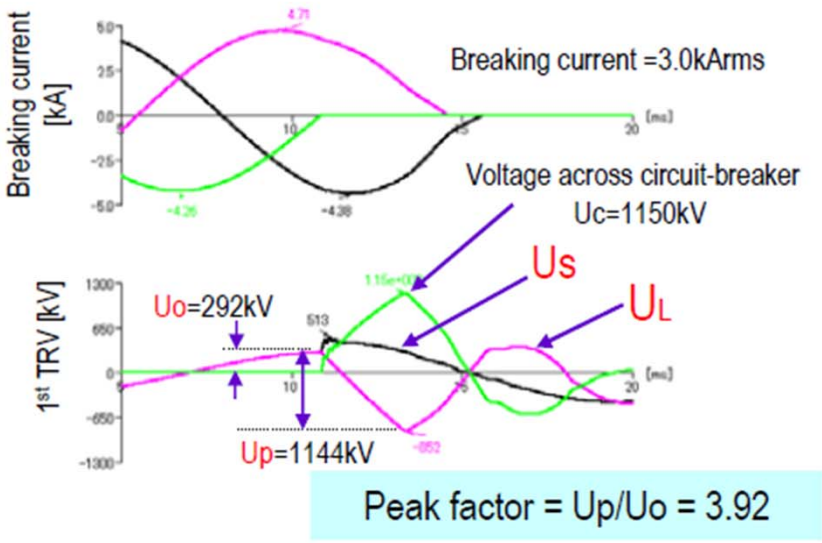

Case 2.2: TRV peak is slightly higher than the value for out-of-phase

GRID | ALSTOM

Influence of Series Capacitors on TRV

- Case 3: 1-phase & 3-phase line faults in 765 kV radial system (Hydro-Quebec parameters) with 40% compensation

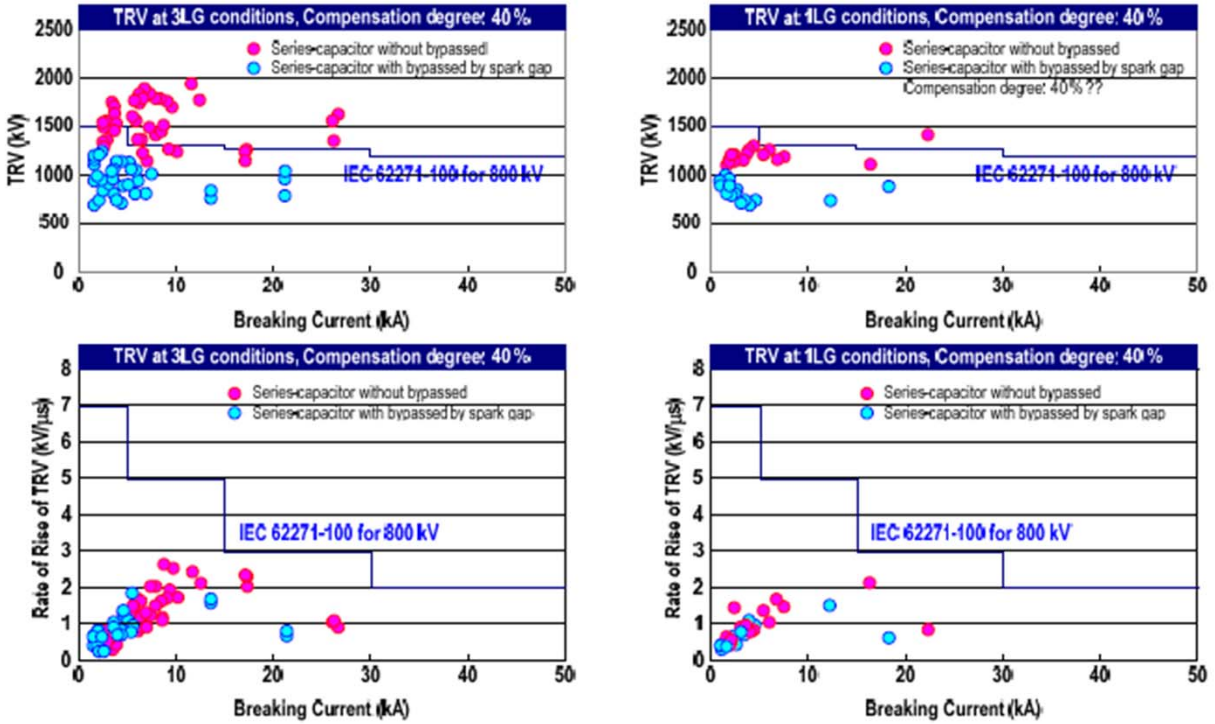

TRV peak for 3-phase faults exceed the values for T10 and T30

GRID | ALSTOM

Influence of Series Capacitors on TRV

- Case 3: Influence of the degree of series compensation

TRV peak increases with the degree of compensation

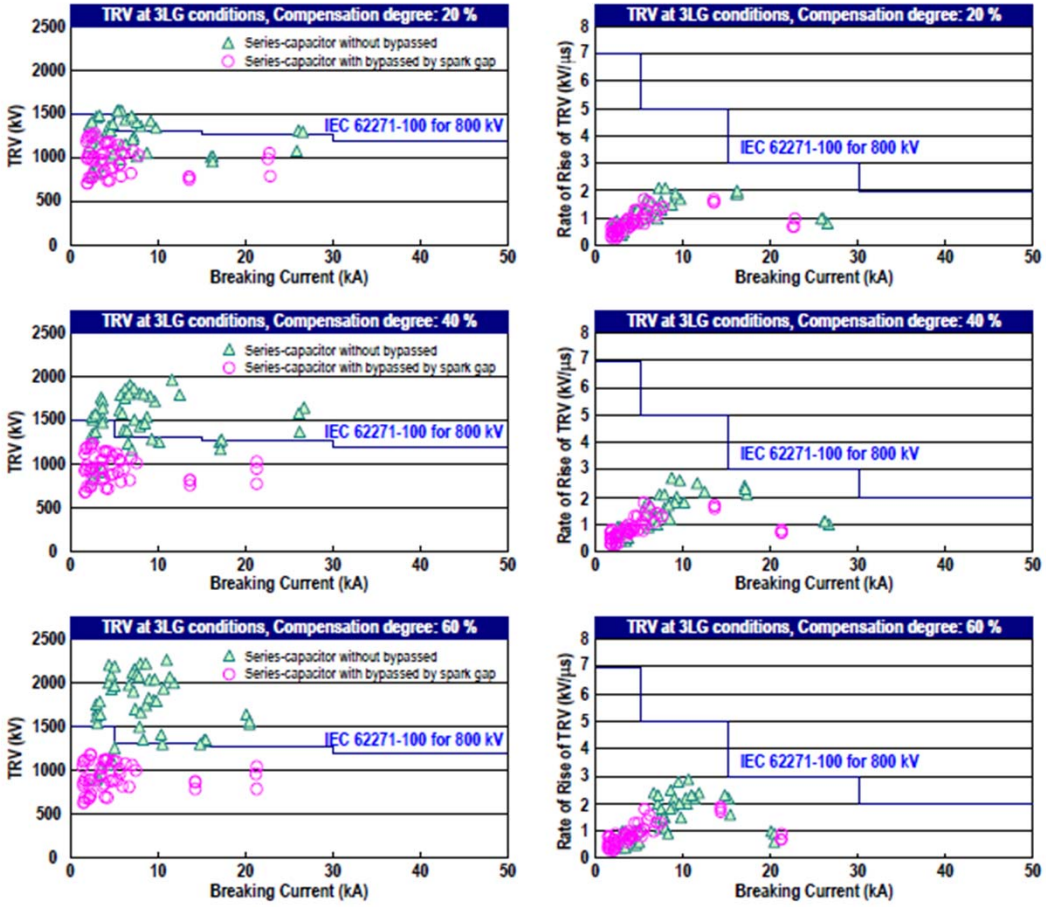

GRID | ALSTOM

Influence of Series Capacitors on TRV

- Case 3: Influence of the degree of series compensation

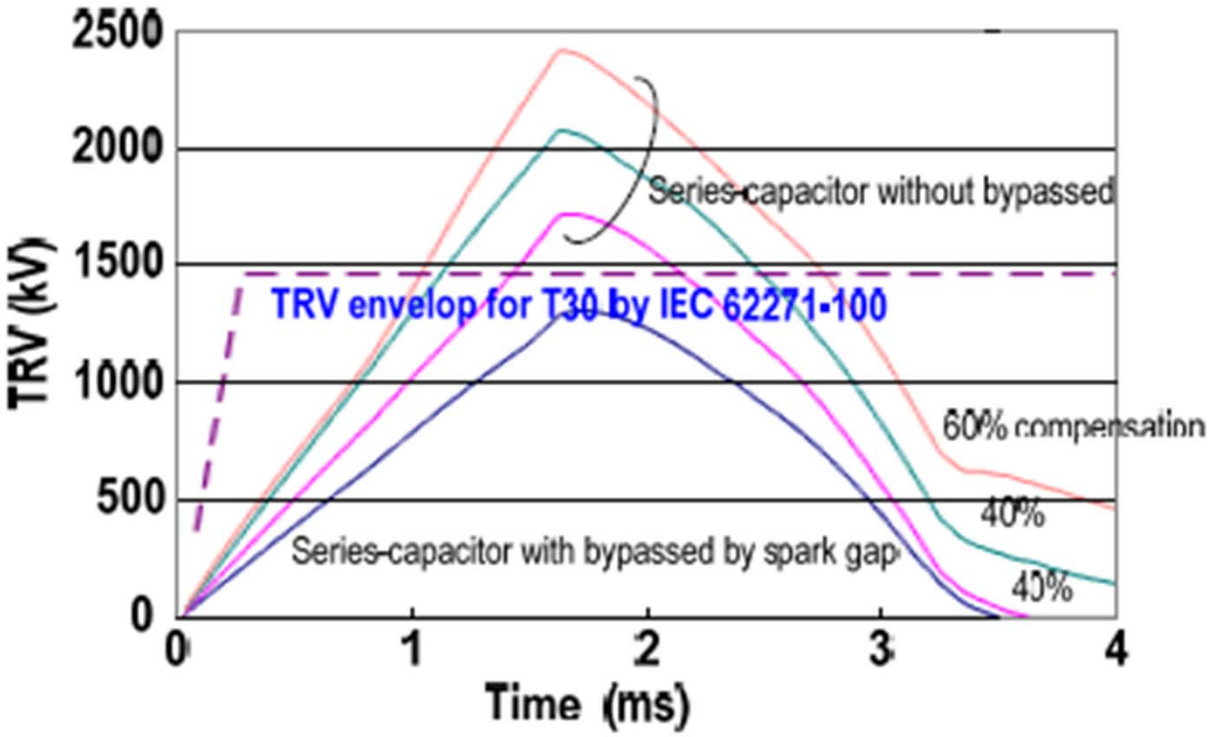

TRV peak increases with the degree of compensation

GRID | ALSTOM

Influence of Series Capacitors on TRV

TRV peak can be up to 4.8 p.u. (Turkey), compared to 2.5 p.u. for OP, two approaches possible:

- Circuit breaker with higher TRV withstand capability (e.g. 550kV circuit breaker for a 420kV application).
- TRV limitation
  - Use of CBs with opening resistors rated at 400 to 600 Ω,
  - Use of surge arresters connected phase-to-ground on the series compensated lines.
  - Use of metal-oxyde varistors connected in parallel with the main contacts of CBs.
  - Fast by-passing of series-capacitors of the faulty line by forced triggering of the protection spark gap, or by closing the by-pass CB.

Annex: Series Capacitor Bank Equipment

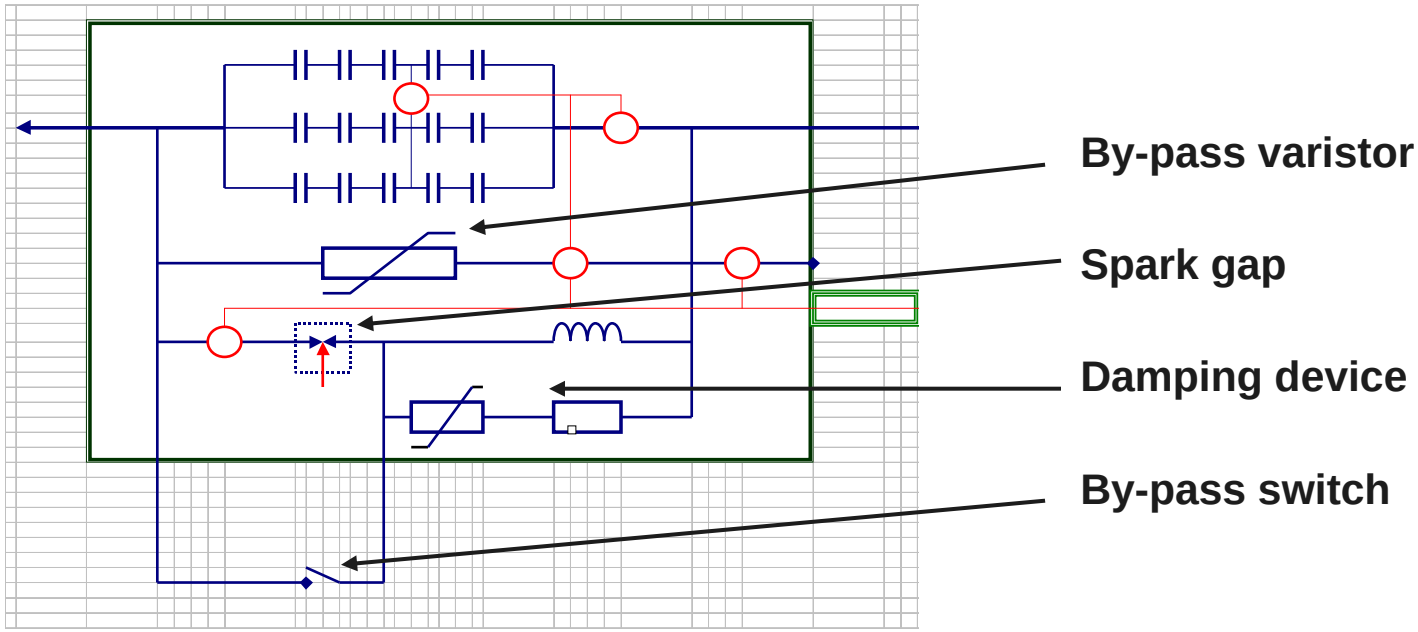

When the voltage across the capacitor reaches the limiting value for the capacitor design, a portion or all of the current is by-passed through the capacitor by-pass system which may include, in addition to the series capacitor, a by-pass varistor, a spark gap, and a by-pass switch with its damping device, depending on the specification of the bank.

Annex from François Gallon tutorial on reactive power

Annex: Series Capacitor Bank Equipment

Metal-oxide Resistor

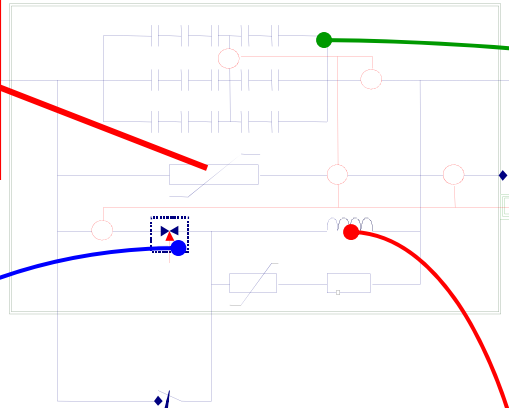

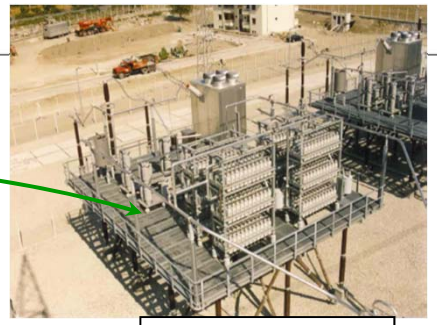

Capacitor

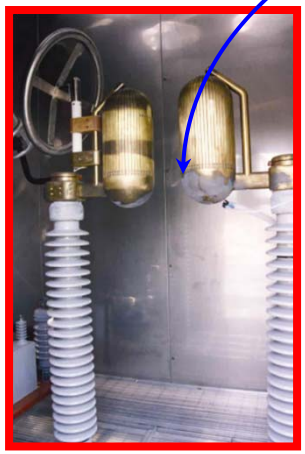

Triggered Air-gap

By-pass Switch

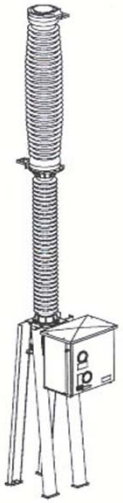

Damping Reactor

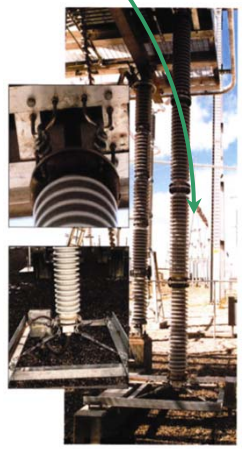

Composite Insulator

GRID | ALSTOM

Harmonization of IEC and IEEE Standards for High-Voltage Circuit Breakers

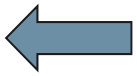

ALSTOM

Harmonization of IEC & IEEE Standards

- Harmonization of IEC & IEEE standards for HV circuit breakers
  - Work done from 1995 to 2010.
  - Aim: Common ratings & test requirements for making and breaking capabilities.
  - Done first for capacitive current switching, and later to harmonize TRVs.
  - Previously, common work was done on shunt reactor switching.

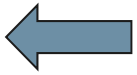

Harmonization of IEC & IEEE Standards

- Introduction
  - Proposals to harmonize IEC & ANSI/IEEE standards for high-voltage circuit-breakers in the 1980's
    - C.L.Wagner and H.M. Smith "Analysis of TRV rating concepts", IEEE Transactions on PAS, Nov. 1984,
    - S.Berneryd "Improvements possible in testing standards for HV circuit-breakers, Harmonization of ANSI and IEC testing", IEEE Transactions on Power Delivery, Oct. 1988.
  - Early contributions
    - First harmonized document in IEEE C37.015 / IEC 61233 in 1993/94: "Shunt reactor Switching" Project leaders: D.Peelo & S.S.Berneryd
    - Other by R.Harner, E.Ruoss, A.Bosma & H.H.Schramm.
  - The process gained momentum after a joint meeting of IEC SC17A & 17C and the IEEE Switchgear Committee in 1995.

Harmonization of IEC & IEEE Standards

- Introduction (Cont'd)
  - Major advances have been made since 1995 towards the further harmonization of IEC and ANSI/IEEE standards for high-voltage circuit breakers, especially for capacitive current switching and short-circuit breaking tests.
  - A first round of harmonization was done in 1997-1999 when IEEE C37.04 and C37.09 were revised to have
    - Rated voltages 123 kV, 170kV & 245kV (IEC adopted 550kV & 800kV)
    - RRRV= 2 kV/μs for circuit breakers with rated voltages ≥ 123kV
  - Capacitive current ratings and tests were harmonized first.
  - Harmonization of Transient Recovery Voltages (TRVs) for short-circuit breaking tests was done in two projects:
    - Harmonization of TRVs for breaking tests of circuit breakers < 100 kV
    - Harmonization of TRVs for breaking tests of circuit breakers ≥ 100 kV

Harmonization of Capacitive Current Switching

ALSTOM

Harmonization of IEC & IEEE Standards

- Capacitive current switching
  - Revision prepared by a common IEC-IEEE Task Force in 1995.
  - Introduction of class C1 (low probability of restrike) and class C2 (very low probability of restrike) and new test requirements.
  - For class C2, the number of tests is doubled and tests are performed after 3 interruptions with 60% of rated short circuit-current.
  - Implemented by IEC SC17A in the first edition of IEC 62271-100 (2001-05),
  - Implemented by the IEEE Switchgear Committee in IEEE C37.04a (2003-07) and C37.09a (2005-09)

Harmonization of TRVs for Circuit Breakers of Rated Voltages Higher than 1 kV & Less than 100 kV

ALSTOM

Harmonization of IEC & IEEE Standards

- Using the input from several Working groups of CIGRE SC A3, IEC SC 17A started in 2002 the revision of TRV requirements for circuit-breakers of rated voltages higher than 1 kV and less than 100 kV.
- Among the reasons for this revision, there was the need to cover cases of application with TRV stresses that were not covered in edition 1.1 of IEC 62271-100, for example
  - Breaking terminal fault currents in systems with low capacitance on the supply side of circuit-breakers;
  - Breaking short-line fault currents in the case of direct connection of the circuit breaker to an overhead line and with rated voltages $\geq$ 15 kV and < 52 kV
  - Breaking transformer-limited faults in the special cases of circuit-breakers intended to be connected to a transformer with a connection of small capacitance;

Harmonization of IEC & IEEE Standards

- Cable systems and line systems

  In order to cover all types of networks (distribution, industrial and sub-transmission) and for standardization purposes, two types of systems are introduced:

  - Cable systems

    Cable systems have a TRV during breaking of terminal fault at 100% of short-circuit breaking current that does not exceed the envelope derived from Table 24 in Edition 1.2 of IEC 62271-100.

    TRV values are those defined in the former editions of IEC standard for high-voltage circuit breakers.

  - Line systems

    Line systems have a TRV during breaking of terminal fault at 100% of short-circuit breaking current defined by the envelope derived from Table 25 in Edition 1.2 of IEC 62271-100. Standard values of TRVs for line systems are those defined in ANSI/IEEE C37.06 for outdoor circuit-breakers.

Harmonization of IEC & IEEE Standards

- Comparison of TRVs for cable systems and line-systems

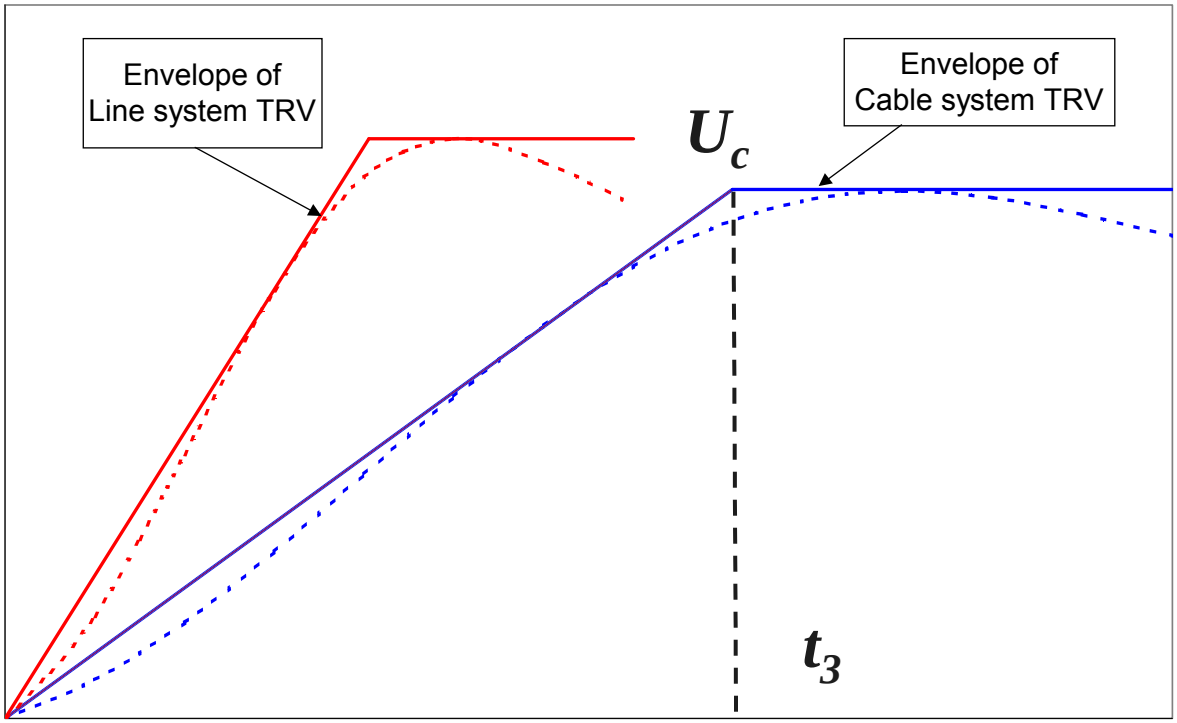

The rate of rise of recovery voltage (RRRV) for line systems is approximately twice the value for cable systems

GRID | ALSTOM

Harmonization of IEC & IEEE Standards

- Harmonization of TRVs between IEC and IEEE

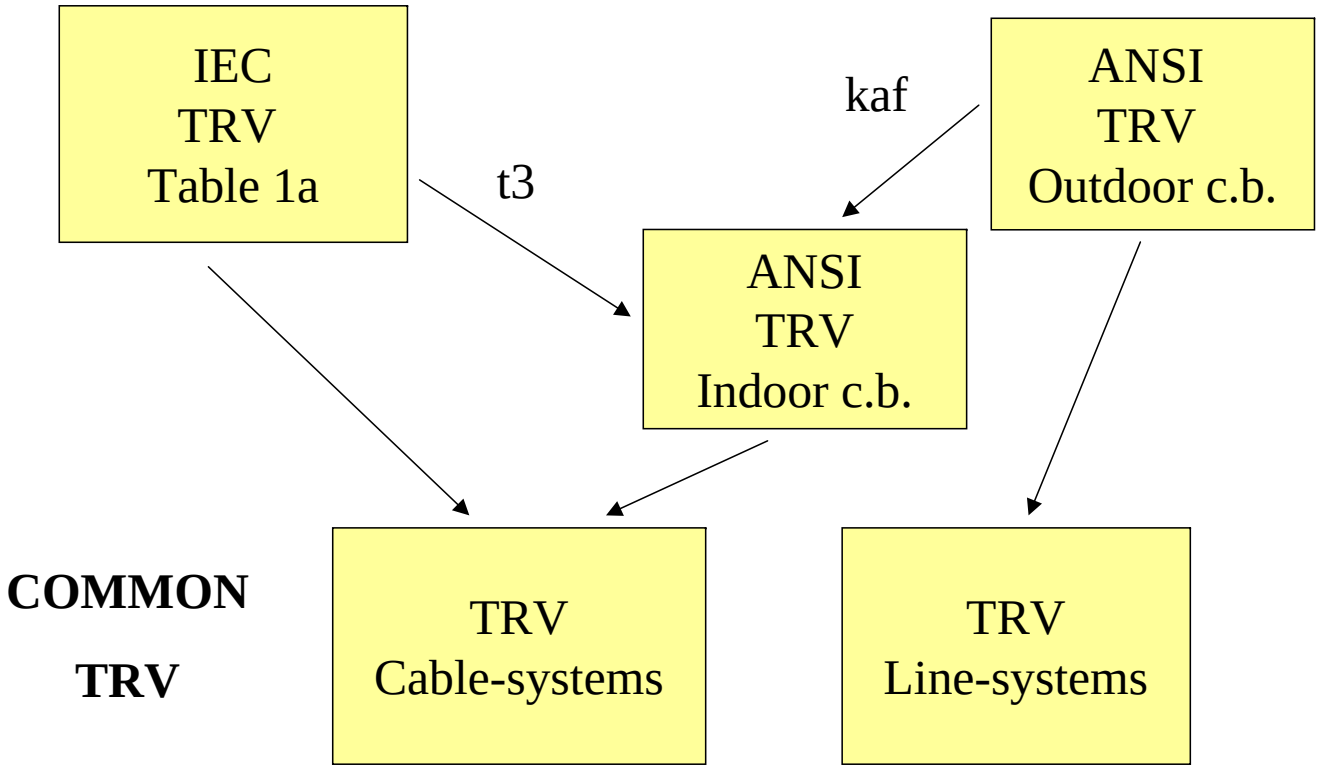

GRID | ALSTOM

Harmonization of IEC & IEEE Standards

- Classes of Circuit breakers
  - Circuit-breaker class S1

    circuit-breaker intended to be used in a cable system
  - Circuit-breaker class S2

    circuit-breaker intended to be used in a line-system, or in a cable-system with direct connection (without cable) to overhead lines

Harmonization of IEC & IEEE Standards

- Classes of Circuit breakers

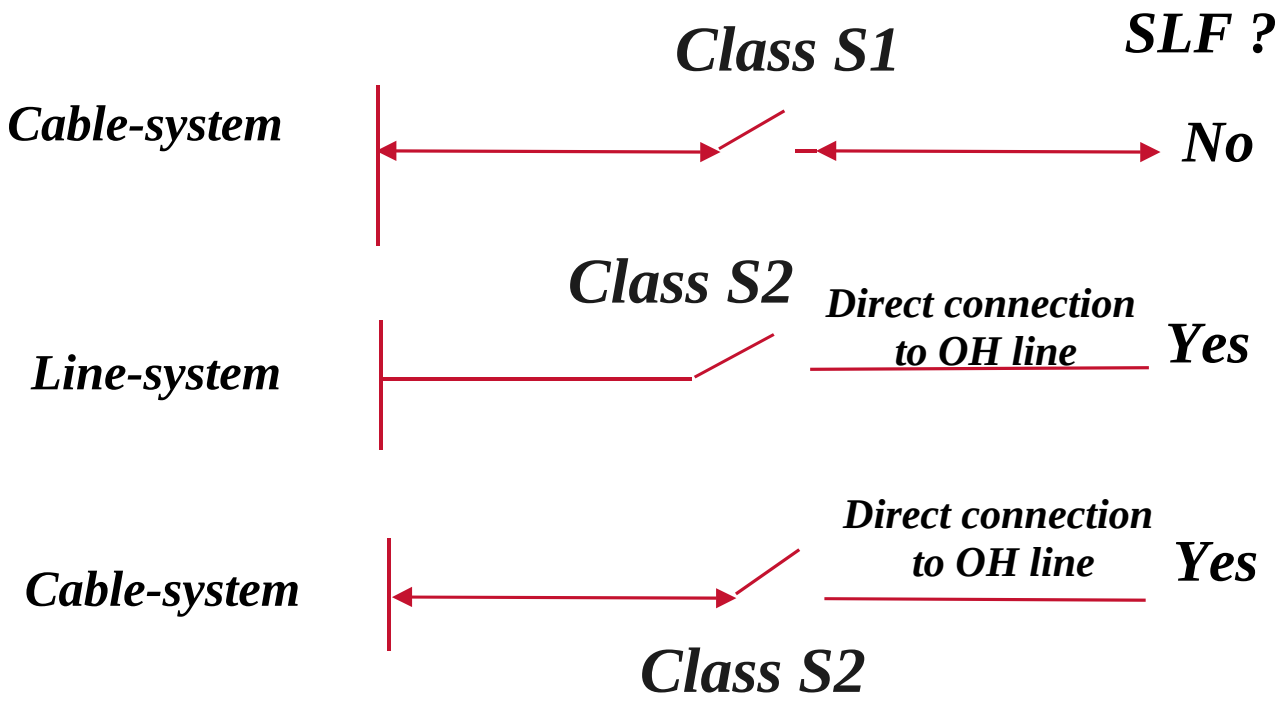

Short-line fault breaking performance is required only for class S2

GRID | ALSTOM

Harmonization of IEC & IEEE Standards

- Examples of TRVs

Table 1 – Standard values of transient recovery voltage for class S1 circuit-breakers –

Rated voltage U_r kV	Type of test	First-pole-to-clear factor k_{pp} p.u.	Amplitude factor k_{af} p.u.	TRV peak value u_c kV	Time t_3 µs	Time delay t_d µs	RRRV [a] u_c/t_3 kV/µs
12	Terminal fault	1,5	1,4	20,6	61	9	0,34
	Out-of-phase	2,5	1,25	30,6	122	18	0,25
24	Terminal fault	1,5	1,4	41,2	87	13	0,47
	Out-of-phase	2,5	1,25	61,2	174	26	0,35
36	Terminal fault	1,5	1,4	61,7	109	16	0,57
	Out-of-phase	2,5	1,25	91,9	218	33	0,42
72,5	Terminal fault	1,5	1,4	124	165	25	0,75
	Out-of-phase	2,5	1,25	185	330	50	0,56

RRRV: Rate of rise of recovery voltage

GRID | ALSTOM

Harmonization of IEC & IEEE Standards

- Examples of TRVs

Table 2 – Standard values of transient recovery voltage for class S2 circuit-breakers

Rated voltage U_r kV	Type of test	First-pole-to-clear factor k_{pp} p.u.	Ampli-tude factor k_{af} p.u.	TRV peak value u_c kV	Time t_3 µs	Time delay t_d µs	RRRV [a] u_c/t_3 kV/µs
24	Terminal fault	1,5	1,54	45,3	43	2	1,05
	Short-line fault	1	1,54	30,2	43	2	0,70
	Out-of-phase	2,5	1,25	61	86	13	0,71
36	Terminal fault	1,5	1,54	67,9	57	3	1,19
	Short-line fault	1	1,54	45,3	57	3	0,79
	Out-of-phase	2,5	1,25	92	114	17	0,81
72,5	Terminal fault	1,5	1,54	137	93	5	1,47
	Short-line fault	1	1,54	91,2	93	5	0,98
	Out-of-phase	2,5	1,25	185	186	28	0,99

Harmonization of IEC & IEEE Standards

- Amplitude factor of TRVs for cable systems and line systems

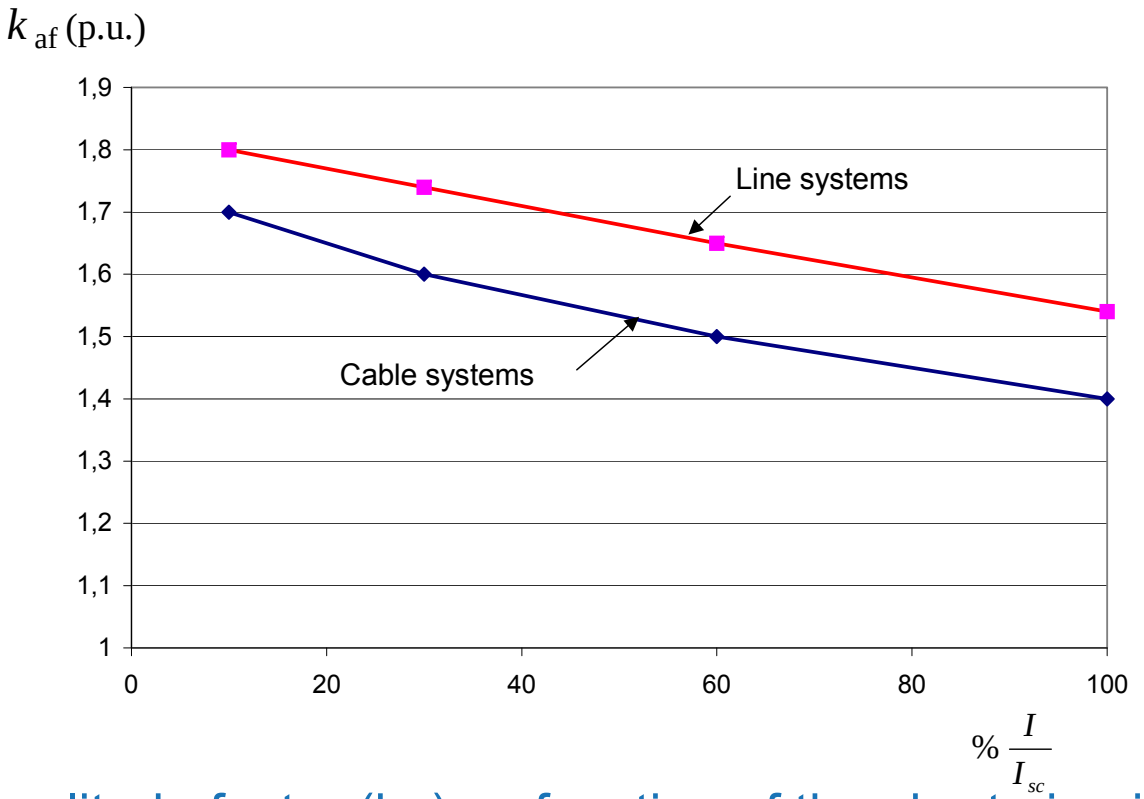

Amplitude factor (k_{af}) as function of the short-circuit current (I_{sc} is the rated short-circuit current)

GRID | ALSTOM

Harmonization of IEC & IEEE Standards

- Short-line-fault requirements
  - Short-line fault tests (SLF) are mandatory for circuit-breakers with rated voltages of 15 kV and above, that are directly connected to overhead lines

    This requirement was limited in edition 1.1 of IEC 62271-100 to rated voltages of 52 kV and above.
  - For circuit-breakers rated 48,3 kV, 52 kV and 72,5 kV the tests comprise a test duty L_{90} and a test duty L_{75} .
  - In the voltage range of 15 kV up to and including 38 kV, the test duty L_{90} has been deleted and the tolerances on the line length for L_{75} have been adapted (71% to 79% SLF).

Harmonization of TRVs for Circuit Breakers of Rated Voltages Equal or Higher than 100 kV

ALSTOM

Harmonization of IEC & IEEE Standards

- The harmonization of TRVs for circuit-breakers of rated voltages equal or higher than 100 kV was prepared by a common IEC-IEEE Working Group.
- The most significant change proposed was the adoption by IEEE of the two-parameter and four-parameter description of TRVs that is used in IEC.
- Previously, for breaking tests with short-circuit current equal or higher than 60% of the rated value, ANSI/IEEE specified a TRV with a so-called “exponential-cosine” waveshape” i.e. the envelope of two curves as shown on the next slide.
- It was also proposed that IEC changes some values of TRV parameters and adopts a two-parameter TRV for test duty T30 (at 30% of rated short-circuit breaking current).

Harmonization of IEC & IEEE Standards

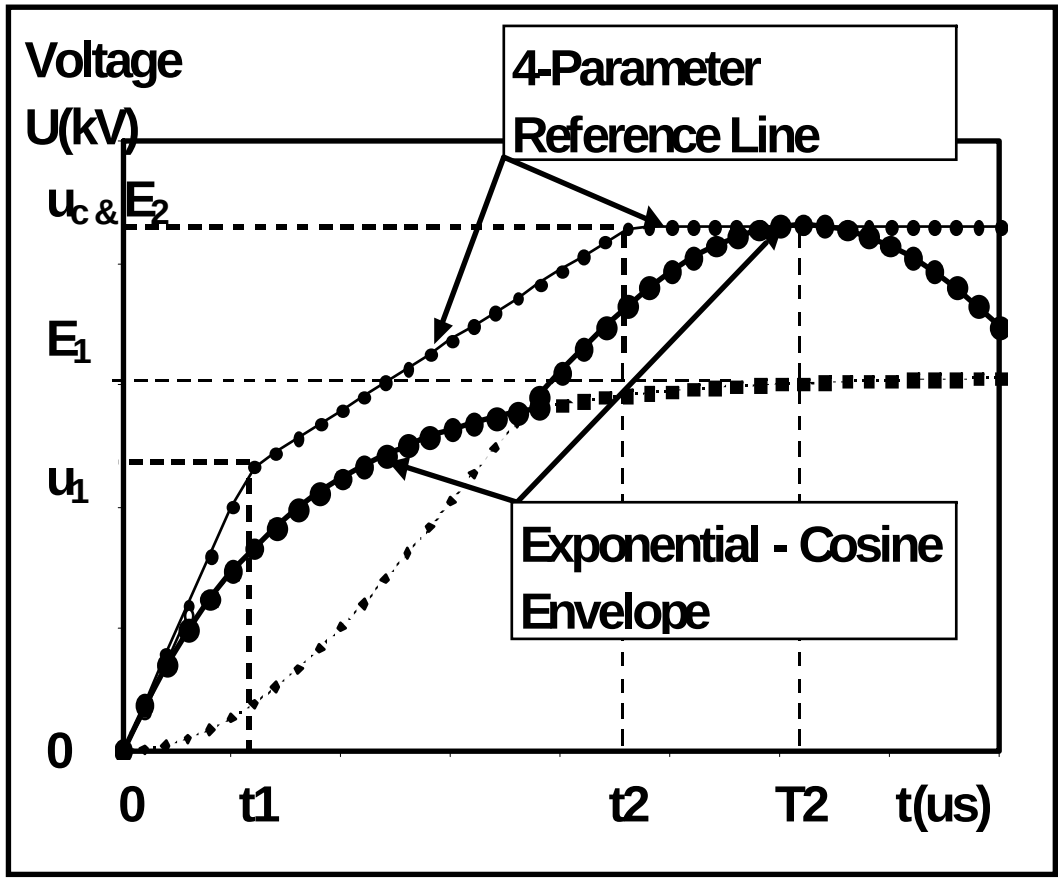

Exponential-Cosine TRV envelope from ANSI/IEEE and the new four-parameter TRV harmonized with IEC

GRID | ALSTOM

Harmonization of IEC & IEEE Standards

- The revisions of IEEE standards C37.04 and C37.06 introduce the four-parameter waveshape, as defined in IEC 62271-100, the first segment (from O to u_1-t_1) is tangent to the "exponential" part of the former waveshape and that third segment is tangent to the peak value of TRV.
- The choice of parameters ensures that the TRV defined with four parameters covers the old one defined by the exponential-cosine waveshape.
- The first reference point (u_1-t_1) of the four-parameter envelope is higher than the corresponding point of the exponential-cosine envelope, this fact prompted the IEC-IEEE WG to recommend having a compromise value, equal to

$$u_1 = 0{,}75 \times k_{pp} U_r \sqrt{\frac{2}{3}}$$

where k_{pp} is the first pole to clear factor and U_r is the rated voltage.

Harmonization of IEC & IEEE Standards

- The recommendations from the WG were approved by IEC and lead to amendment 1 to IEC 62271-100 published in May 2002.
- The RRRV for test duty T10 (at 10% of rated short-circuit breaking current) was set to 7 kV/µs, for all rated voltages.
- The TRV peak for test duty T10 is increased to better cover the cases of long line faults (k_{af} = 1.76).
- IEEE has approved the same TRV values in
  - IEEE C37.04b-2008 Amendment 2: To Change the Description of Transient Recovery Voltage for Harmonization with IEC 62271-100
  - IEEE C37.09b-2010 Amendment 2: To Change the Description of Transient Recovery Voltage for Harmonization with IEC 62271-100
- In addition, IEEE has kept alternative values with a first-pole-to-clear factor of 1.5 for all rated voltages (to cover three-phase ungrounded faults).

Harmonization of IEC & IEEE Standards

- Conclusion
  - Major advances have been made during 15 years (1995-2010) towards the harmonization of IEC and ANSI/IEEE standards for high-voltage circuit breakers.
  - It allows to perform common tests for capacitive current switching, making and breaking short-circuit currents.
  - Harmonization of TRVs is completed with harmonized values in
    - amendment 1 to IEC 62271-100,
    - amendments 2 to IEEE C37.04 and 09.

Harmonization of IEC & IEEE Standards

- Bibliography
  - D. Dufournet - “Harmonization of IEC and IEEE Standards for High-Voltage Circuit-Breakers and Guidance for Non-standard Duties”, CIGRE International Technical Colloquium, September 12&13, 2007
  - Wagner C.L., Dufournet D., Montillet G. - "Revision of the Application Guide for Transient Recovery Voltage for AC High-Voltage Circuit-breakers of IEEE C37.011: A Working Group Paper of the High Voltage Circuit-breaker Subcommittee", IEEE Transactions on Power Delivery, January 2007, pp 161-166.
  - Smith K., Dufournet D. - Harmonization of IEC and IEEE TRV waveforms, Tutorial on Power Circuit-breakers presented at IEEE PES General Meeting in Pittsburgh, 2008.

Annexes

Annex A
First-Pole-to-Clear Factor
(Symmetrical components)

First-Pole-to-Clear Factor Calculation

- Symmetrical Components
  - C.L.Fortescue published a paper in 1918 in which he proposed a method to resolve an unbalanced set of n phasors into a system of n-1 balanced sequence components and one zero-sequence component.
  - The so-called symmetrical components thus created are commonly used for the analysis of 3-phase electrical systems.
  - A vector for three-phase voltages and corresponding symmetrical components can be written as

$$\begin{bmatrix} U_R \\ U_S \\ U_T \end{bmatrix} = \begin{bmatrix} 1 & 1 & 1 \\ 1 & a^2 & a \\ 1 & a & a^2 \end{bmatrix} \begin{bmatrix} U_0 \\ U_1 \\ U_2 \end{bmatrix} \qquad a = e^{j2\pi/3}$$

$$\begin{bmatrix} U_0 \\ U_1 \\ U_2 \end{bmatrix} = \frac{1}{3} \begin{bmatrix} 1 & 1 & 1 \\ 1 & a & a^2 \\ 1 & a^2 & a \end{bmatrix} \begin{bmatrix} U_R \\ U_S \\ U_T \end{bmatrix}$$

  where *a* is an operator that rotates any phasor quantity by 120°
  - Subscripts 0, 1 and 2 refer respectively to the zero sequence, positive sequence and negative sequence components.

GRID | ALSTOM

First-Pole-to-Clear Factor Calculation

- Symmetrical Components

  Illustration of 3 unbalanced voltages V_a, V_b and V_c that are each the sum of balanced components (positive sequence, negative sequence and zero sequence)

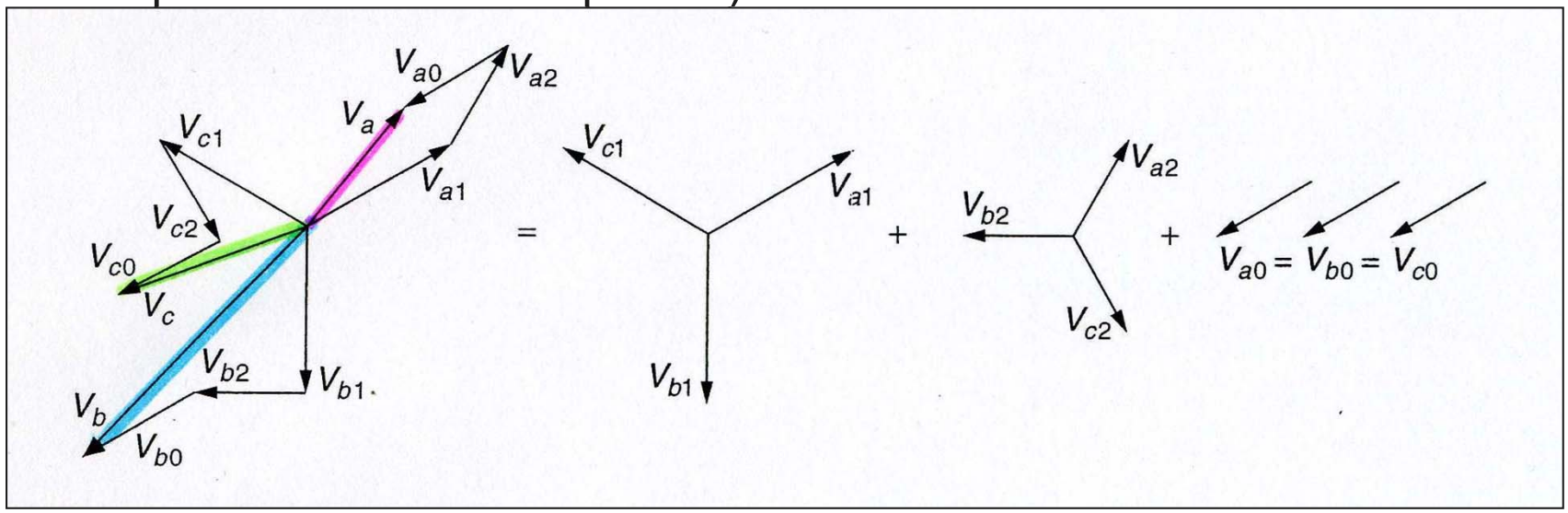

Positive sequence components

Negative sequence components

Zero sequence components

GRID | ALSTOM

First-Pole-to-Clear Factor Calculation

- Three-phase circuit with a three-phase terminal fault.

  Figure shows the situation just after interruption by the first pole.

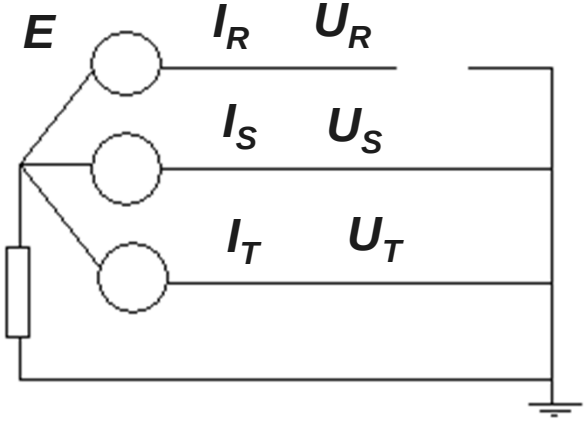

- Using symmetrical components

$$I_R = 0 \rightarrow I_R = I_0 + I_1 + I_2 = 0$$
$$U_S = 0 \rightarrow U_S = U_0 + a^2 U_1 + a U_2 = 0$$
$$U_T = 0 \rightarrow U_T = U_0 + a U_1 + a^2 U_2 = 0 \quad \text{(1)}$$

$$U_1 = E - X_1 \times I_1$$
$$U_2 = -X_2 \times I_2$$
$$U_0 = -X_0 \times I_0$$

avec $a = e^{j2\pi/3}$

X_1 = positive-sequence reactance
X_2 = negative-sequence reactance
X_0 = zero-sequence reactance

GRID | ALSTOM

First-Pole-to-Clear Factor Calculation

- Replacing U_1, U_2 and U_0 in (1)

$$I_1 + I_2 + I_0 = 0$$

$$-X_0 \times I_0 + a^2 \left(E - X_1 \times I_1\right) - a \left(X_2 \times I_2\right) = 0$$

$$\Rightarrow \quad -X_0 \times I_0 + a \left(E - X_1 \times I_1\right) - a^2 \left(X_2 \times I_2\right) = 0$$

$$I_1 + I_2 + I_0 = 0 \qquad \textit{(2)}$$

$$a^2\ X_1 \times I_1 + a\ X_2 \times I_2 + X_0 \times I_0 = a^2\ E \qquad \textit{(3)}$$

$$a\ X_1 \times I_1 + a^2\ X_2 \times I_2 + X_0 \times I_0 = a\ E \qquad \textit{(4)}$$

a (4) – (3):

$$\left(1 - a\right) X_2 \times I_2 + \left(a - 1\right) X_0 \times I_0 = 0$$

$$\rightarrow \quad X_2 \times I_2 = X_0 \times I_0 \qquad \textit{(5)}$$

a (3) – (4):

$$\left(1 - a\right) X_1 \times I_1 + \left(a - 1\right) X_0 \times I_0 = \left(1 - a\right) E$$

$$\rightarrow \quad X_1 \times I_1 - X_0 \times I_0 = E \qquad \textit{(6)}$$

GRID | ALSTOM

First-Pole-to-Clear Factor Calculation

- From (5): $$I_2 = \frac{X_0 \times I_0}{X_2} \qquad (7)$$

- From (2) and (7): $$I_1 + \frac{X_0 \times I_0}{X_2} + I_0 = 0 \quad \text{and} \quad I_0 = -\frac{I_1 \times X_2}{X_2 + X_0} \qquad (8)$$

- From (6): $$X_1 \times I_1 + \frac{X_0 \times X_2}{X_2 + X_0} \times I_1 = E$$

$$I_1 \left(X_1 + \frac{X_0 \times X_2}{X_0 + X_2} \right) = E$$

$$\Rightarrow \quad I_1 = \frac{E}{X_1 + \frac{X_0 \times X_2}{X_0 + X_2}} \qquad (9)$$

- From (2) and (8): $$I_2 = -I_1 - I_0 = -\frac{I_1 \times X_0}{X_0 + X_2} \qquad (10)$$

GRID | ALSTOM

First-Pole-to-Clear Factor Calculation

$$U_R = U_0 + U_1 + U_2$$

$$U_R = -X_0 \times I_0 + E - X_1 \times I_1 - X_2 \times I_2$$

$$U_R = \frac{X_0 \times X_2}{X_0 + X_2} \times I_1 + E - X_1 \times I_1 + \frac{X_0 \times X_2}{X_0 + X_2} \times I_1$$

$$U_R = \left(2\frac{X_0 \times X_2}{X_0 + X_2} - X_1 \right) \times \frac{E}{X_1 + \dfrac{X_0 \times X_2}{X_0 + X_2}} + E$$

$$U_R = \frac{\left(2X_0 \times X_2 - X_1 \times X_2 - X_0 \times X_1\right)}{X_0 \times X_2 + X_1 \times X_2 + X_0 \times X_1} \times E + E$$

$$\frac{U_R}{E} = \frac{\left(2X_0 \times X_2 - X_1 \times X_2 - X_0 \times X_1\right)}{X_0 \times X_2 + X_1 \times X_2 + X_0 \times X_1} + 1 = \frac{3X_0 \times X_2}{X_0 \times X_2 + X_1 \times X_2 + X_0 \times X_1}$$

If $X_1 = X_2$:

$$k_{pp} = \frac{U_R}{E} = \frac{3X_0 \times X_1}{X_1^2 + 2X_1 \times X_0} = \frac{3X_0}{X_1 + 2X_0}$$

First-Pole-to-Clear Factor Calculation

- Application of the basic formula $$k_{pp} = \frac{3\,X_0}{X_1 + 2\,X_0}$$
  - Systems with non-effectively grounded neutral

    X_0 is much larger than X_1, then: $$k_{pp} = \frac{3\,X_0}{2\,X_0} = 1.5$$
  - Systems with effectively grounded neutral

    by definition, X_0 is equal or lower than 3 X_1, then the highest value of k_{pp} is:

$$k_{pp} = \frac{3 \times 3.0}{1 + 2 \times 3.0} = \frac{9.0}{7.0} = 1.286 \approx 1.3$$

    In the case of UHV systems, the ratio X_0 / X_1 is close to 2, as the system is radial and high power transformers have a great influence on this ratio, it follows that k_{pp} is in this case near 6 / 5 = 1.2.

GRID | ALSTOM

First-Pole-to-Clear Factor Calculation

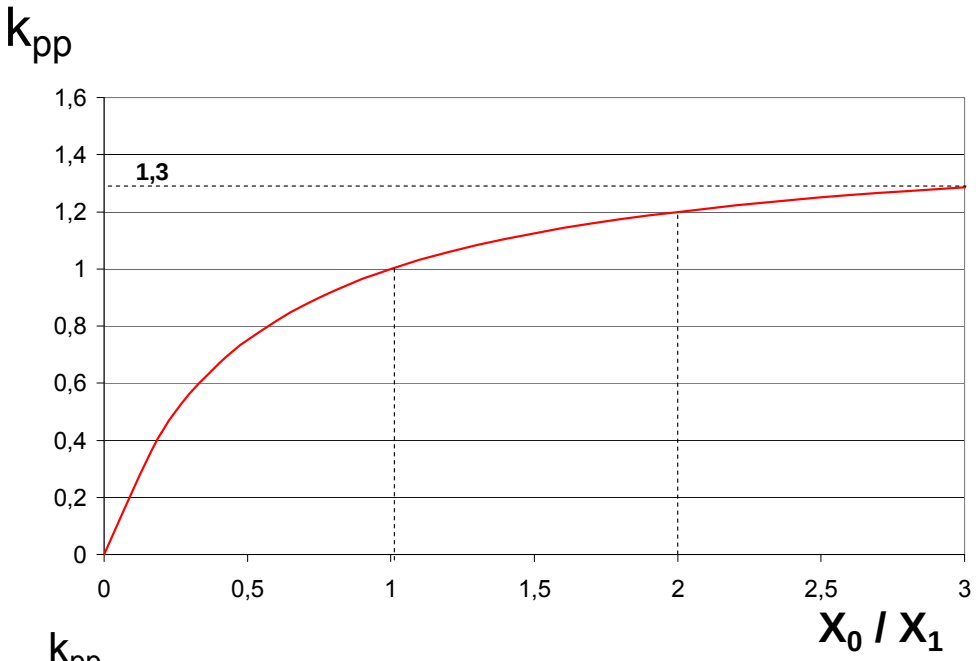

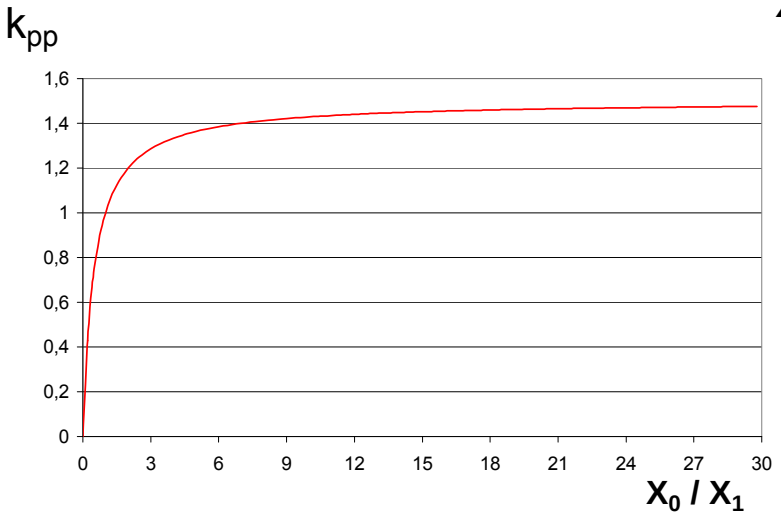

GRID | ALSTOM

Annex B
Second-Pole-to-Clear Factor
(Systems with effectively grounded neutral)

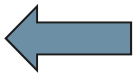

Second-Pole-To-Clear Factor

- 3-Phase Terminal Fault

  Calculation of the recovery voltage of the 2nd pole to interrupt (U_S), the 3rd pole (phase R) is still conducting.

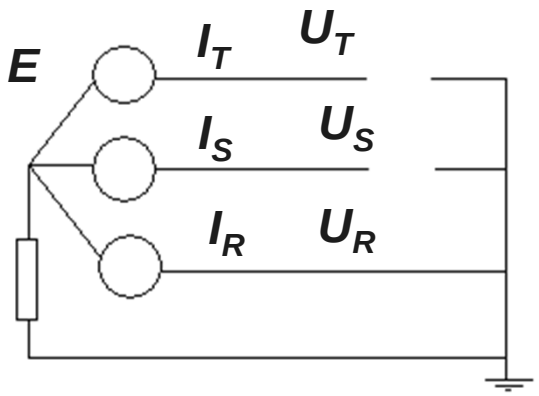

Using symmetrical components

$$I_S = 0 \quad I_T = 0 \quad U_R = 0$$

$$I_0 = \left(I_R + I_S + I_T\right)/3 = I_R/3$$

$$I_1 = \left(I_R + a\,I_S + a^2\,I_T\right)/3 = I_R/3$$

$$I_2 = \left(I_R + a^2\,I_S + a\,I_T\right)/3 = I_R/3$$

$$I_0 = I_1 = I_2 \qquad \textbf{(12)}$$

$$avec \quad a = e^{j2\pi/3}$$

$$U_S = U_0 + a^2 U_1 + a U_2 \qquad \textbf{(11)}$$

$$U_1 = E - X_1 \times I_1$$

$$U_2 = -X_2 \times I_2$$

$$U_0 = -X_0 \times I_0$$

X_1 = positive-sequence reactance
X_2 = negative-sequence reactance
X_0 = zero-sequence reactance

GRID | ALSTOM

Second-Pole-To-Clear Factor

- Calculation of U_S

$$U_R = U_1 + U_2 + U_0 = 0 \quad \Rightarrow \quad E - X_1 \times I_1 - X_2 \times I_1 - X_0 \times I_1 = 0$$

$$\Rightarrow I_1 = \frac{E}{X_1 + X_2 + X_0} \quad et \quad I_R = \frac{3E}{X_1 + X_2 + X_0}$$

from (11) and (12)

$$U_S = -X_0 \times I_0 + a^2 \left(E - X_1 \times I_1\right) - a X_2 \times I_2$$

$$U_S = -\left(X_0 + a X_1 + a X_2\right) I_1 + a^2 E$$

$$U_S = \left(X_0 \left(-1 + a^2\right) + X_2 \left(-a + a^2\right)\right) E / \left(X_0 + X_1 + X_2\right)$$

$$U_S = -\frac{0.5\left(3 + j\sqrt{3}\right) X_0 + j\sqrt{3}\, X_2 \times E}{X_0 + X_1 + X_2}$$

$$\frac{U_S}{E} = -\frac{\sqrt{3}\, X_0 / 2 + j\left(X_2 + X_0 / 2\right)}{X_0 + X_1 + X_2} \qquad \textbf{(13)}$$

GRID | ALSTOM

Second-Pole-To-Clear Factor

- The second-pole-to-clear factor (k_{pp2}) is the modulus of (13)

$$k_{pp2} = \sqrt{3} \times \frac{\left(3/4\,X_0^2 + 1/4\,X_0^2 + X_0 \times X_2 + X_2^2\right)^{0.5}}{X_0 + X_1 + X_2}$$

with $X_1 = X_2$

$$k_{pp2} = \sqrt{3} \times \frac{\left(X_0^2 + X_0 \times X_1 + X_1^2\right)^{0.5}}{X_0 + 2X_1}$$

This equation can be expressed as function of $\alpha = X_0 / X_1$

$$k_{pp2} = \sqrt{3} \times \frac{\left(\alpha^2 + \alpha + 1\right)^{0.5}}{2 + \alpha}$$

GRID | ALSTOM

Second-Pole-To-Clear Factor

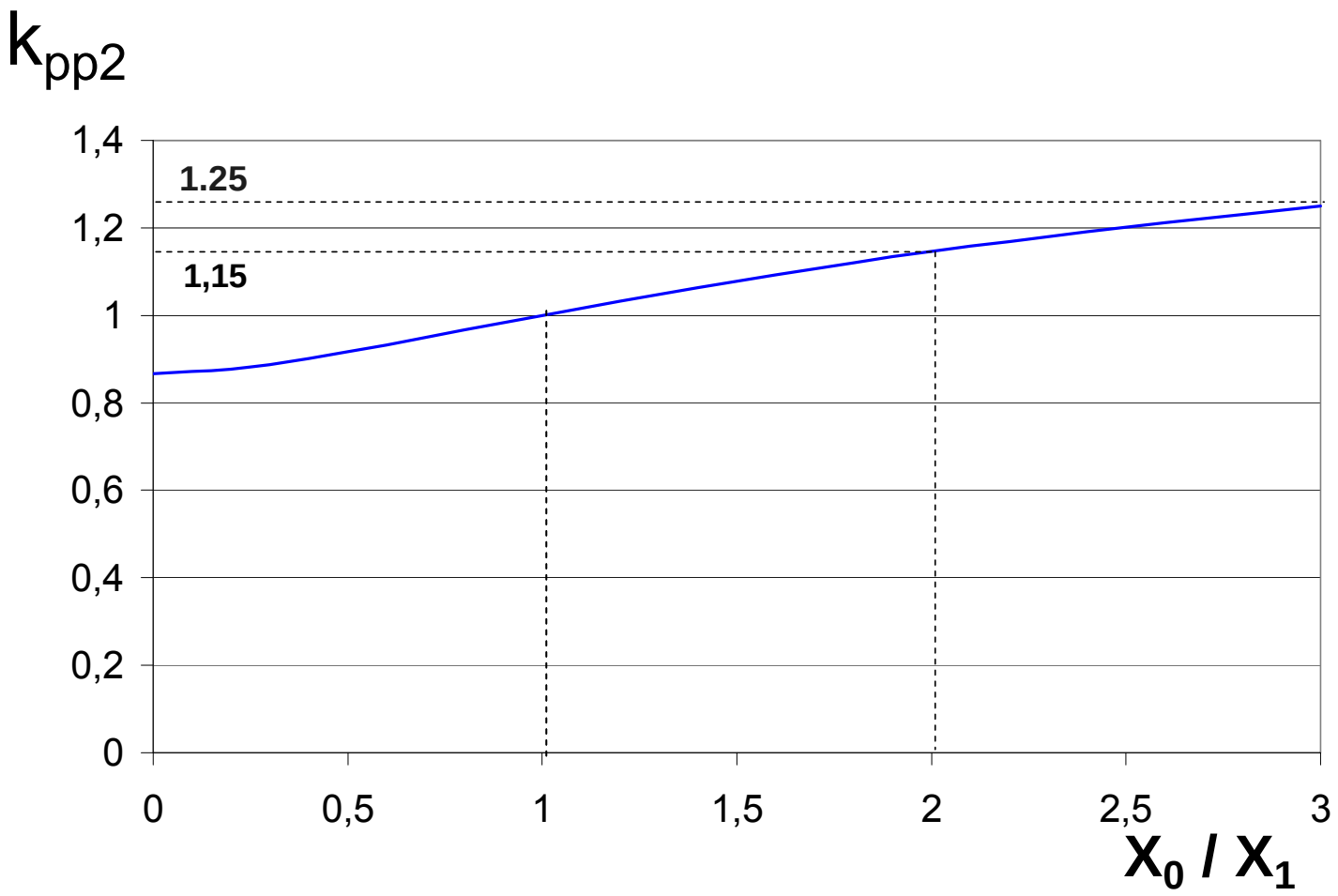

GRID | ALSTOM

Annex C
Complement on Line Faults

Basis of short-line fault rating, single-phase fault

- In the present standard IEEE C37.04b and in IEC 62271-100, the short-line fault rating is based on the last-pole-to-open for a three-phase-to-ground fault or the single pole that clears a single phase-to-ground fault.
- For a given magnitude of fault current, this results in the highest rate of rise of recovery voltage (RRRV) since the surge impedance for the last clearing pole is the highest as will be shown later.
- When the fault current is near full rating (90% or more), it is necessary to test for the thermal breakdown in the arc (during the first micro-seconds after current zero) and the RRRV is the primary factor.
- Also, the phase-to-ground fault is the most likely fault occurring on a transmission system and it is therefore logical to choose this fault condition to check the thermal breakdown regime.

Basis of short-line fault rating, single-phase fault

- The line surge impedance taken in standards for last-pole-to-open and for single-phase faults is 450 Ω. It is usually higher than in actual system conditions and assumes that bundled conductors at the higher system voltages have clashed, thus increasing the surge impedances.

- For lower fault currents, this clashing does not occur and therefore the standard value of 450 Ω introduces some margin in the application as this value is used for type testing.
- For the phase-to-ground fault case, the standards are based on a source that has the same fault current magnitude as the breaker rating I_{sc} (assumed to be the same as the three phase fault current).
- This may not be the actual case in field conditions which have significant contribution of fault current from lines, that generally show the zero sequence power frequency reactance (X_0) being 2 to 3 times larger than the positive sequence power frequency reactance (X_1), while transformers may show a X_0 less than X_1.

Basis of short-line fault rating, single-phase fault

- The fault current is determined by the phase-to-ground voltage V_{ph}, the source impedance X_s, and the line impedance X_{1line}. The source impedance is based on circuit-breaker rating (I_{sc}): $X_s = V_{ph} / I_{sc}$.
- The line reactance per unit length for a phase to ground fault is based on the positive (X_1) and zero sequence (X_0) power frequency reactances per unit length.
- For a length of line l_1, the line reactance is.

$$X_{1line} = \frac{(2X_1 + X_0)}{3} \times l_1$$

- The short circuit current is the phase to ground voltage divided by the sum of the source and line reactances using these expressions:

$$I_{1SLF} = \frac{V_{ph}}{\frac{V_{ph}}{I_{Isc}} + \frac{(2X_1 + X_0)}{3} \times l_1}$$

GRID | ALSTOM

Basis of short-line fault rating, single-phase fault

- The calculation of the line side voltage is based on the effective surge impedance for the last pole to interrupt Z_{last}, evaluated at the high TRV frequency, and the rate of change of current at the current zero:

$$RRRV_{last} = \omega\sqrt{2}\ I_{1SLF}\ Z_{last}$$

- The line side contribution to TRV is the product of $RRRV_{last}$ by the time to peak that is equal to 2 times the travel time to the fault at distance l_1.
- Substituting for $RRRV_{last}$ and using the speed of light c to calculate the travel time across twice the distance l_1, the line side contribution to TRV for the last pole or the single pole is:

$$e_{L1} = RRRV \times t_{L1} = \omega\sqrt{2} \times I_{1SLF} \times Z_{last} \times \frac{2}{c} \times \frac{\frac{V_{ph}}{I_{1SLF}} - \frac{V_{ph}}{I_{sc}}}{\frac{2}{3}X_1 + \frac{1}{3}X_0}$$

the d-factor is then

$$d_1 = \omega \times Z_{last} \times \frac{2}{c} \times \frac{1}{\frac{2}{3}X_1 + \frac{1}{3}X_0}$$

Annex D
Equivalent Circuit for 3-Phase to Ground Fault

Circuit for 3-Phase to Ground Fault

- Single line diagram

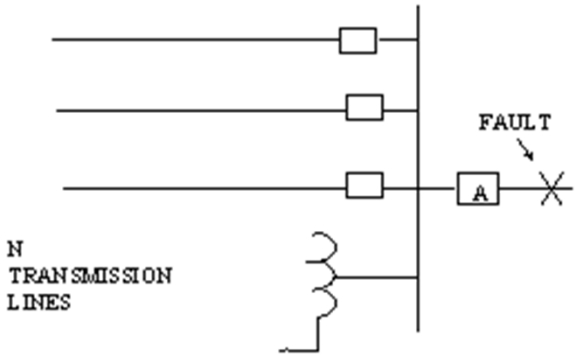

Three-phase diagram

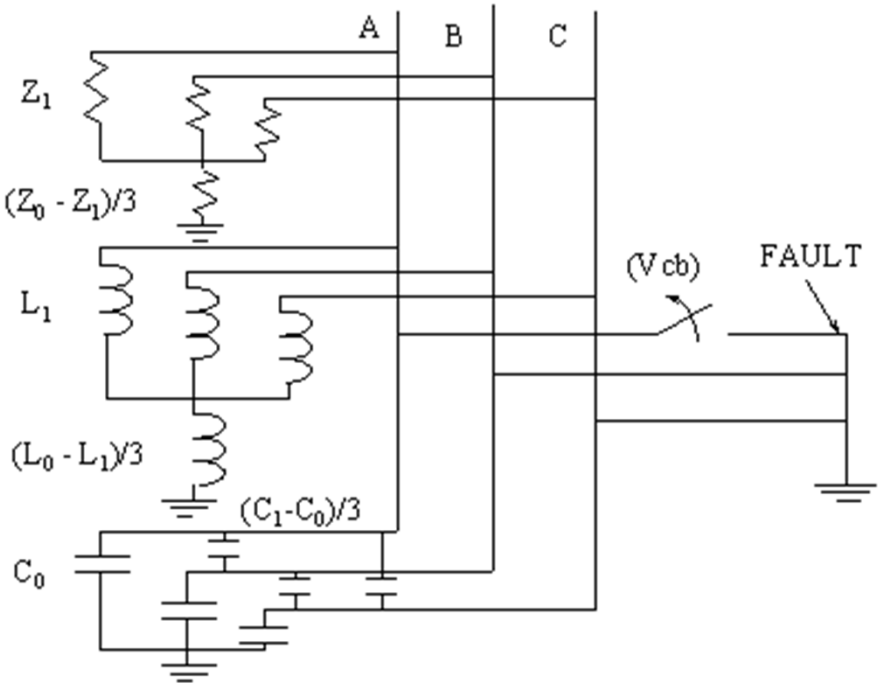

GRID | ALSTOM

Circuit for 3-Phase to Ground Fault

- Calculation of the equivalent inductance for the first-pole-to-clear

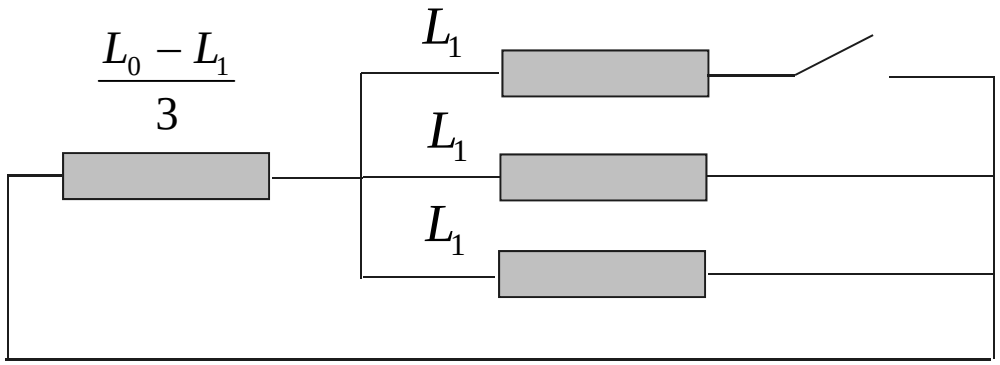

$$L_{eq} = L_1 + \frac{\frac{L_1}{2} \times \left(\frac{L_0 - L_1}{3} \right)}{\frac{L_1}{2} + \left(\frac{L_0 - L_1}{3} \right)} = L_1 + \frac{L_1 \left(L_0 - L_1 \right)}{L_1 + 2\,L_0}$$

$$L_{eq} = \frac{3\,L_1 \times L_0}{L_1 + 2\,L_0}$$

GRID | ALSTOM

Annex E
Test Circuit for k_{pp} = 1.3

Test Circuit for k_{pp} = 1.3

- The aim is to calculate the neutral reactance (X_N) in order to have the relevant recovery voltage on the first pole to clear (U_R). In a second step, calculation is done for k_{pp}= 1.3
  - After interruption of phase R

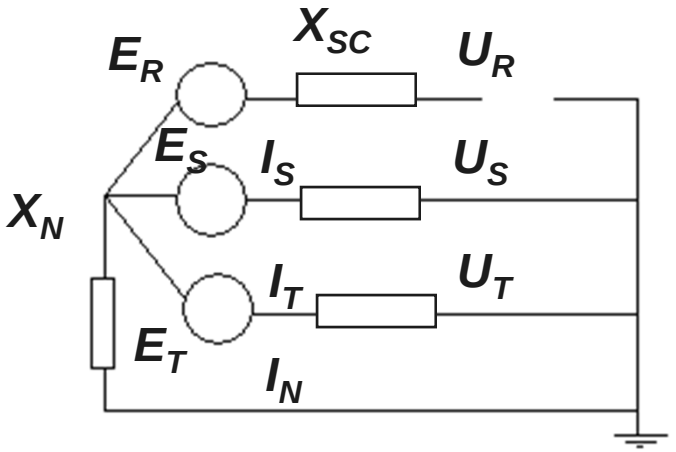

$$E_S = X_{SC} \times I_S + X_N \times I_N$$

$$E_T = X_{SC} \times I_T + X_N \times I_N$$

$$E_R + E_S + E_T = 0$$

$$I_S + I_T = I_N$$

$$E_S + E_T = (I_S + I_T)\, X_{SC} + 2\, X_N \times I_N = \left(X_{SC} + 2\, X_N\right) I_N = -E_R$$

$$\Rightarrow \quad I_N = -E_R \,/\left(X_{SC} + 2\, X_N\right)$$

GRID | ALSTOM

Test Circuit for k_{pp} = 1.3

- Recovery voltage on the first pole to clear (pole R)

$$U_R = E_R - X_N \times I_N = \left(1 + \frac{X_N}{X_{SC} + 2X_N}\right) E_R = \frac{\left(X_{SC} + 3X_N\right)}{\left(X_{SC} + 2X_N\right)} E_R$$

- The recovery voltage must be equal to the value calculated with sequential components

$$U_R = k_{pp} \times E_R = \frac{3X_0}{X_1 + 2X_0} \times E_R$$

with $X_{SC} = X_1$ in order to have the required short-circuit current

it follows that:

$$\frac{3X_0}{X_1 + 2X_0} = \frac{X_1 + 3X_N}{X_1 + 2X_N}$$

$$\Rightarrow \quad \boxed{X_0 = X_1 + 3X_N \quad and \quad X_N = \frac{X_0 - X_1}{3}} \qquad (1)$$

GRID | ALSTOM

Test Circuit for k_{pp} = 1.3

- First-pole-to-clear factor:

$$k_{pp} = \frac{3\,X_0}{X_1 + 2X_0} \qquad (2)$$

- From (1)

$$\frac{X_N}{X_1} = \frac{X_0 / X_1 - 1}{3} \qquad (3)$$

- From (2)

$$\frac{X_0}{X_1} = \frac{k_{pp}}{3 - 2k_{pp}}$$

  then

$$\frac{X_0}{X_1} - 1 = \frac{k_{pp}}{3 - 2k_{pp}} - 1 = \frac{3\left(k_{pp} - 1\right)}{3 - 2k_{pp}} \qquad (4)$$

- From (3) and (4)

$$\boxed{\frac{X_N}{X_1} = \frac{k_{pp} - 1}{3 - 2k_{pp}}}$$

- If k_{pp} = 1.3

$$\frac{X_N}{X_1} = \frac{0.3}{3 - 2.6} = \frac{0.3}{0.4} = 0.75$$

GRID | ALSTOM

Annex F
Bibliography

Bibliography

- [1] Hochrainer (A.). Proposition relative à la détermination d'une tension transitoire de rétablissement équivalente pour les disjoncteurs (méthode des quatre paramètres). CIGRE session 1958, rapport 151. Das Vier-Parameter-Verfahren zur Kennzeichnung der Einschwingspannung in Netzen. ETZ 78. (1957-10).
- [2] Griscom (S.B.), Sauter (D.M.), Ellis (H.M.), Transient Recovery Voltages on Power Systems, Part II Practical Methods of Determination. AIEE Transactions Vol.11 (1958-08)
- [3] Pouard (M.). Nouvelles notions sur les vitesses de rétablissement de la tension aux bornes de disjoncteurs à haute tension. Bulletin Société Française des Electriciens N°95 (1958-11).
- [4] Baltensperger (P.). Définition de la tension transitoire de rétablissement aux bornes d'un disjoncteur par quatre paramètres, possibilités des stations d'essais de court-circuit. Bulletin de l'Association Suisse des électriciens N°3 (1960).
- [5] Bolton (E.), Ehrenberg (A.C.) et al. Etudes britanniques sur les phénomènes du défaut kilométrique. CIGRE Session 1964, Rapport 109 (1964-06).
- [6] Beehler (J.E.), Naef (0.), Zimmerman (C.P.). Proposed transient recovery voltage ratings for power circuit breakers. IEEE Transactions on Power Apparatus and systems N°84 (1965).

Bibliography

- [7] Catenacci (G.), Paris (L.), Couvreux (J.P.), Pouard (M.). Transient Recovery Voltages in French and Italian High-Voltage Networks. IEEE Transactions on Power Apparatus and Systems, vol. PAS-86, N°11 (1967).
- [8] Baltensperger (P.), Cassie (A.M.), Catenacci (G.), Hochrainer (A.), Johansen (O.S.), Pouard (M.). Tensions transitoires de rétablissement dans les réseaux à haute tension - Défauts aux bornes. CIGRE Session 1968, Rapport 13-10 (1968).
- [9] Dienne (G.), Frisson (J.M.). Contribution à l'étude expérimentale des tensions de rétablissement lors de la coupure de transformateurs court-circuités au secondaire. CIGRE Session 1968, rapport 13-07 (1968).
- [10] Colclaser (R.G.), Buettner (D.E.). The Traveling-wave Approach to Transient Recovery Voltage. . IEEE Transactions on Power Apparatus and Systems, vol. PAS-88, N°7 (1969-07).
- [11] Petitpierre (R.), Watschinger (H.). Transient Recovery Voltage Conditions to be Expected when Interrupting Short-circuit Currents Limited by Transformers. CIGRE Session 1970, Paper 13-07 (1970).

Bibliography

- [12] Harner (R.), Rodriguez (J.). Transient Recovery Voltages Associated with Power system, Three-phase transformer secondary Faults. IEEE Power Engineering Society (1971-02).
- [13] Dubanton (Ch.), Gervais (G.), Van Nielsen. Surge impedance of overhead lines with bundle conductors during short-line fault. Electra N°17 (1971-04).
- [14] Calvino (B.). Quelques aspects des contraintes supportées par les disjoncteurs haute-tension à la coupure d'un court-circuit. CIGRE Session 1974, Rapport 13-08 (1974).
- [15] Catenacci (G.), CIGRE WG13-01. Contribution on the study of the initial part of the transient recovery voltage. Electra N°46 (1976).
- [16] Braun (A.), Hinterthür (K.H.), Lipken (H.), Stein (B.), Völcker (O.). Characteristics values of the transient recovery voltage for different types of short-circuits in an extensive 420 kV system. ETZa, vol.97 (1976).
- [17] Braun (A.), Suiter (H.). Détermination des tensions transitoires de rétablissement apparaissant aux bornes des disjoncteurs de groupes dans les grandes centrales modernes. CIGRE Session 1976, Rapport 13-03 (1976).

Bibliography

- [18] Hedman (D. E.), Lambert (S. R.). Power Circuit Breaker Transient Recovery Voltage. IEEE Transactions on Power Apparatus and Systems, vol. PAS-95, pp. 197–207, (1976 -01)
- [19] CIGRE WG 13.01, Transient Recovery Voltage in Extra-High Voltage Networks, Electra N°63 (1979-03)
- [20] Colclaser (R.G.), Reckleff (J.G.). Investigations of inherent transient recovery voltage for Generator Circuit breakers. IEEE Transactions on Power Apparatus and Systems, vol. PAS-102, N°19 (1983-9).
- [21] Wagner (C.L.), Smith (H.M.). Analysis of Transient Recovery Voltage (TRV) rating concepts. IEEE Transactions on Power Apparatus and Systems, vol. PAS-103, N°11 (1984-11).
- [22] Haginomori (E.). Performance of circuit-breakers related to high rate of rise of TRV in high power, high density networks. IEEE Paper 85 W172-2 (1985).
- [23] Parrott (P.G.). A review of Transformer TRV Conditions. Electra N°102 (1985-10)
- [24] Thuries (E.) & CIGRE TF 13.00.2, Generator circuit-breaker TRV in most severe short-circuit conditions, Electra N°113 (1987).

Bibliography

- [25] Thuries (E.), & CIGRE TF 13.00.2, Generator circuit-breaker TRV under load current and out-of-phase switching conditions, Electra N°126 (1989).
- [26] Ruoss (E.), Kolarik (E.), A New IEEE / ANSI Standard for Generator Circuit Breakers, IEEE Transactions on Power Apparatus and Systems, vol. 10, N°2 (1995-04).
- [27] Bonfanti (I.), Colombo (E.). A contribution to the assessment of TRVs in MV distribution systems and circuit breaker performances. Colloquium CIGRE SC13, Florianopolis (1995-09).
- [28] CIGRE-CIRED WG CC03. TRV in Medium Voltage Networks. Electra N°181 and Technical Brochure N°134 (1998-12)
- [29] Dufournet (D.), Willième (J.M.). Disjoncteurs de générateur : Chambre de coupure SF6- Coupure de courants avec passages par zéro retardés- Influence des connections par câbles sur la TTR en coupure de défauts alimentés par le réseau. CIGRE Session 2002, Rapport 13-101 (2002).
- [30] Hamade (H.), Kasahara (Y.) et al. Severe duties on high-voltage circuit breakers observed in recent power systems. CIGRE Session 2002, Rapport 13-103 (2002).

Bibliography

- [31] Smeets (R.P.P.), Peelo (D.F.) et al. Evolution of stresses in distribution networks and their impact on testing and certification of medium voltage switchgear. CIGRE Session 2002, Rapport 13-106 (2002).
- [32] Iliceto (F.), Dilli (B.). TRVs across circuit breakers of series compensated lines. Analysis, design and operation experience in the 420kV Turkish grid. CIGRE Session 2002, Rapport 13-109 (2002).
- [33] Dufournet (D.), Montillet (G.). TRV Requirements for System Source Fault Interrupting by Small Generator Circuit Breakers. IEEE Transactions on Power Delivery, vol. 17, N°2 (2002-04).
- [34] Johnson (Anders), Analysis of Circuit Breaker Transient Recovery Voltages Resulting from Transmission Line Faults, Thesis Master of Science in Electrical Engineering, University of Washington (2003)
- [35] Steurer (M.), Hribernik (W.), Brunke (J.). Calculating the TRV Associated with Clearing Transformer Determined Faults by Means of Frequency Response Analysis. IEEE Transactions on Power Delivery, vol. 19, N°1 (2004-01).
- [36] Hribernik (W.), Graber (L.), Brunke (J.), Inherent Transient recovery Voltage of Power Transformers – A Model-Based Determination Procedure, IEEE Transactions on Power Delivery, Vol.21, N°1 (2006-01)

Bibliography

- [37] Wagner (C.), Dufournet (D.), Montillet (G.), Extensive Revision of the Application Guide for High-Voltage Circuit Breakers of IEEE C37.011 (2007).
- [38] Dufournet (D.), Harmonization of IEC and IEEE Standards for High-Voltage Circuit-Breakers and Guidance for Non-Standard Duties", CIGRE Colloquium, Paper PS2-06, in Rio de Janeiro, (2007-09)
- [39] Janssen (A.), Dufournet (D.), "Travelling Waves at Line Fault Clearing and Other Transient Phenomena", CIGRE Session 2010, Paper A3-102, August 2010
- [40] CIGRE WG A3-22, Technical Requirements for Substation Equipment Exceeding 800 kV AC, Technical Brochure 362 (2008-12)
- [41] CIGRE WG A3-19, "Line fault phenomena and their implications for 3-phase short and long-line fault clearing", Technical Brochure 408 (2010-02)
- [42] Dufournet (D.), Hu (J.), "Revision of IEEE C37.011 Guide for the Application of Transient Recovery Voltages for AC High-Voltage Circuit Breakers", IEEE Transactions on Power Delivery (2012-04)
- [43] A.C.O. Rocha, G.H.C. Oliveira, R.M. Azevedo, A.C.S. Lima, Assessment of Transformer Modeling Impact on Transient Recovery Voltage in Transformer Limited Faults, Paper A3-107, CIGRE Session 2012.

Bibliography

- [44] Yamagata (Y.), Kosakada (M.), Ito (H.) et al., Considerations on Transformer Limited Fault duty for GCB in UHV and EHV networks with large capacity power transformers, Paper A3-108, CIGRE Session 2012.
- [45] Dufournet (D.), Hu (J.), Janssen (A.), Transformer Limited Fault Transient Recovery Voltage for EHV and UHV circuit-breakers, ISH 2013, August 2013.
- [46] CIGRE WG A3.28 “Switching Phenomena for EHV and UHV Equipment”, Technical Brochure to be published end of 2013/beginning 2014.
- [47] CIGRE WG 13.01 “Surge Impedance of Overhead Lines with Bundle Conductors during Short-Line Faults”, Electra N°17, 1971.

Thanks for your attention
Questions ?

At Hilton Palacio del Rio, San Antonio (Texas), September 19th 2013

ALSTOM