fred harris

DSP Based Corrections of Analog Components in Digital Receivers

IEEE Communications, Signal Processing, and Vehicular Technology Chapters
Coastal Los Angeles Section

24-April 2008

San Diego State University
College of Engineering

It's all done with Computer Chips

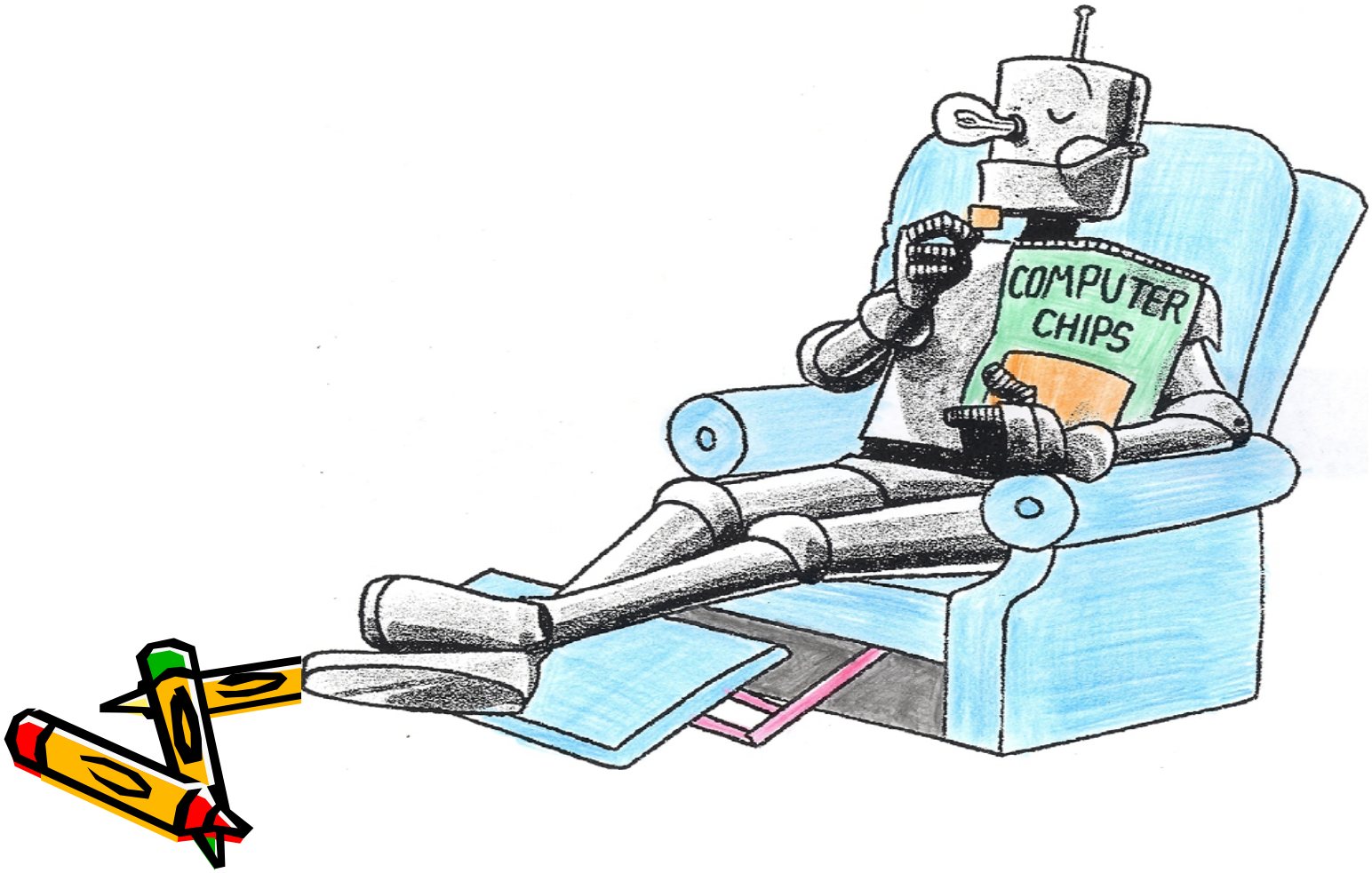

We each own a BillionTransistors

We have an amazing wealth of resources at our disposal! Just How big is a Billion?
A stack of a billion dollar notes would be 76.2 kilometers High.
A billion seconds ago was 32.5 years ago.

We each own a Billion Transistors

For Comparison, the Eiffel Tower Contains 18,084 Parts
It is Fastened together by 2.5 Million Rivets

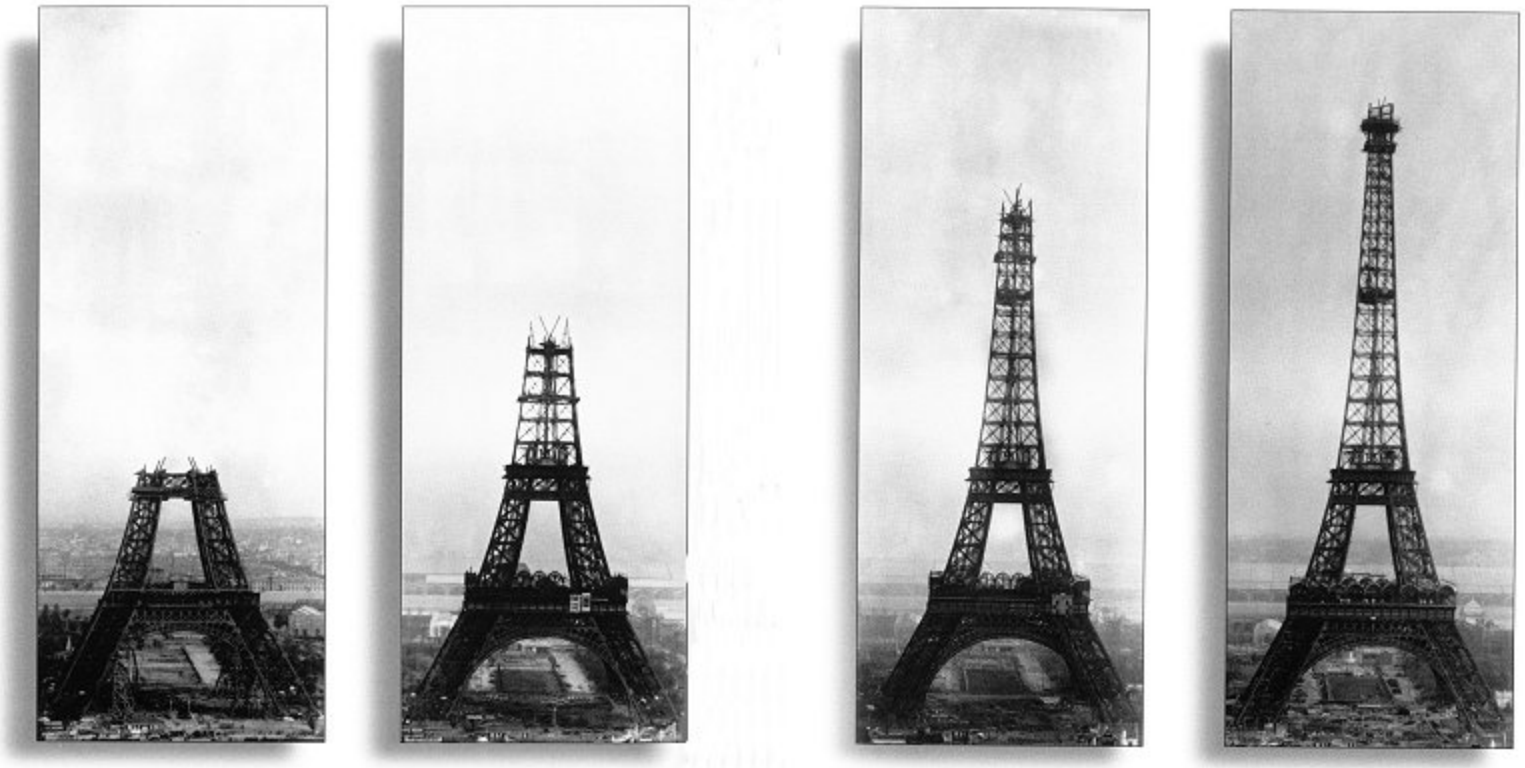

We each own a Billion Transistors

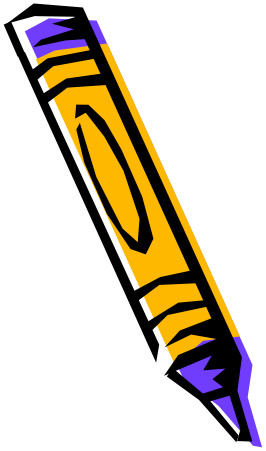

The world manufactures more transistors than it grows grains of rice.

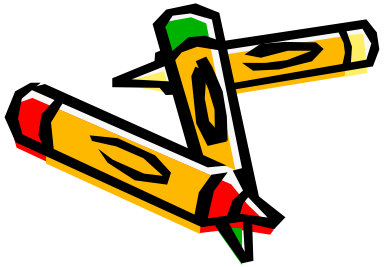

How big is a billion grains of rice?

- 8mm x 2mm x 2mm (Long Grain)
- 1-billion grains of rice
- 8 Meters x 2 Meters x 2 Meters
- Or 32 Cubic Meters
- Or a cube 3.2 Meters on a side
- It weighs 24,000 kgr (26.6 tons)
- Market price, $1,000/ton; $26,600
- CLS-350 Mercedes Benz weighs 2,200 kgr (gross wt)

Digital Translator

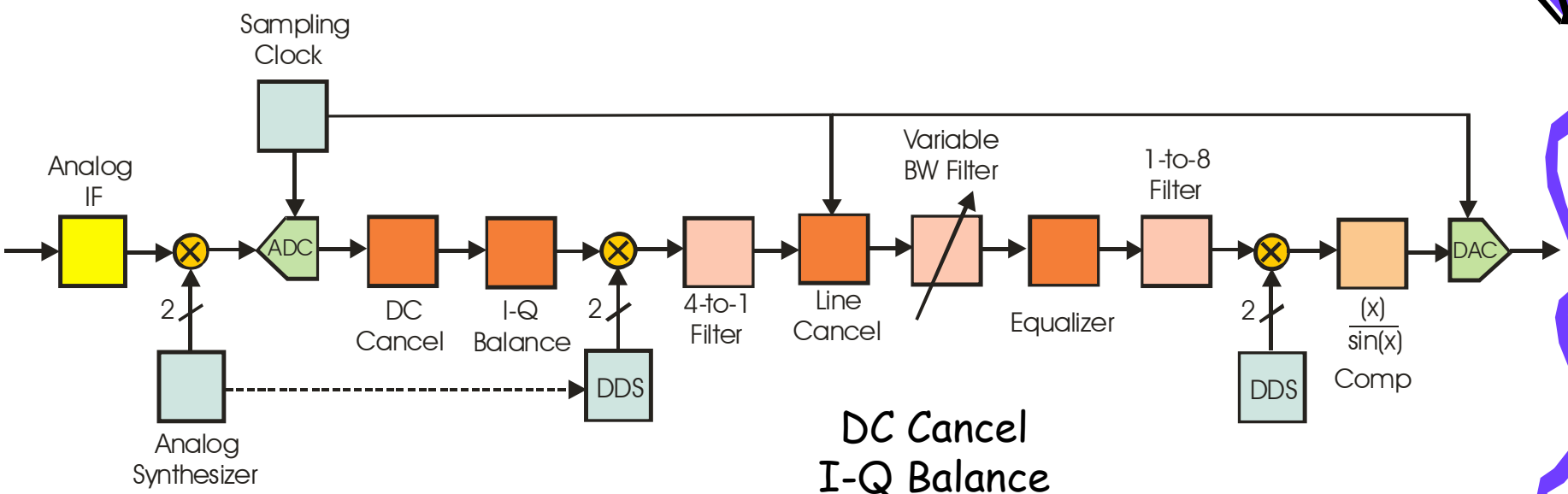

DC Cancel
I-Q Balance
Digital Translation
Line Cancel
Variable BW Filter
Equalizer
DAC sin(x)/x Compensation

From Where Did DC Come?

- Self Mixing in Analog Down Converter
- ADC Injects DC
- 2's Complement Arithmetic Injects DC

Self Mixing in Down Converter

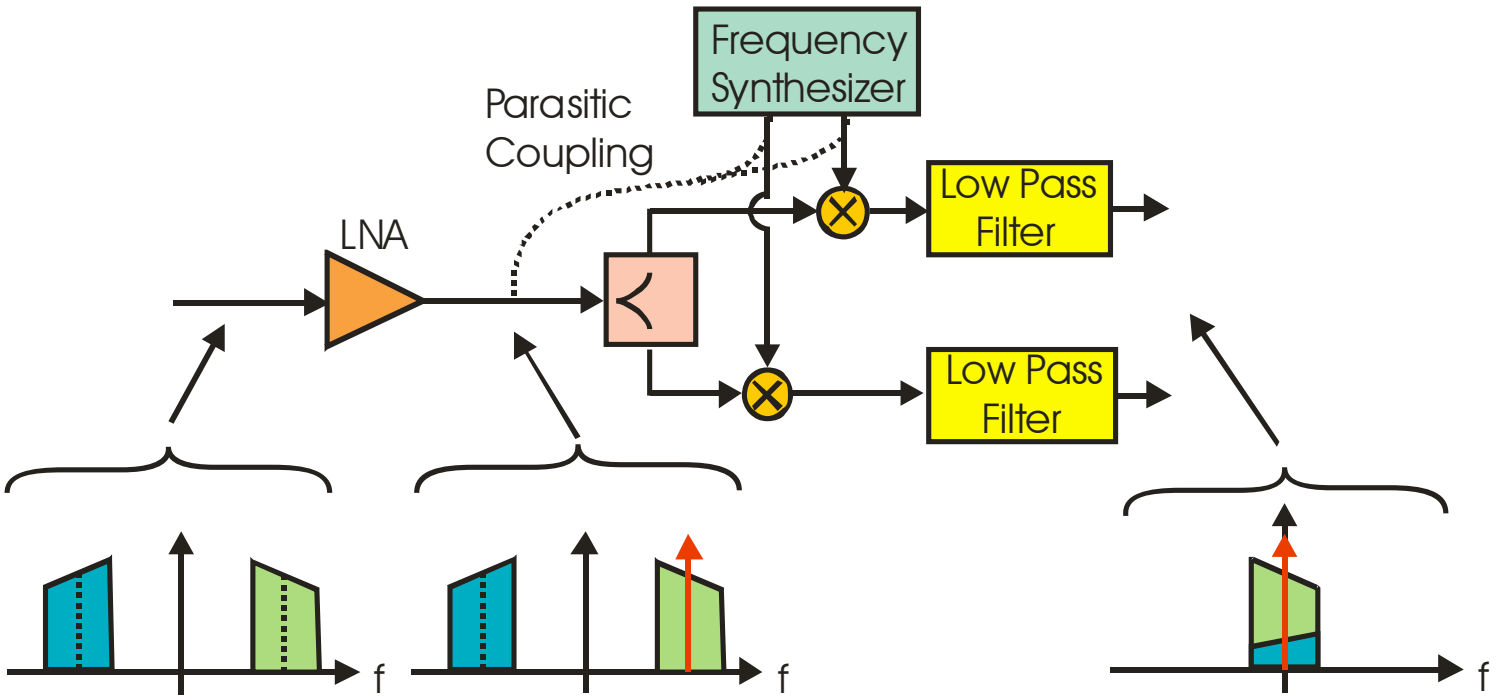

DC Offset: Self Mixing
Desired Component: Mixing
Spectral Image: I-Q Imbalance

DC From A-to-D Converter

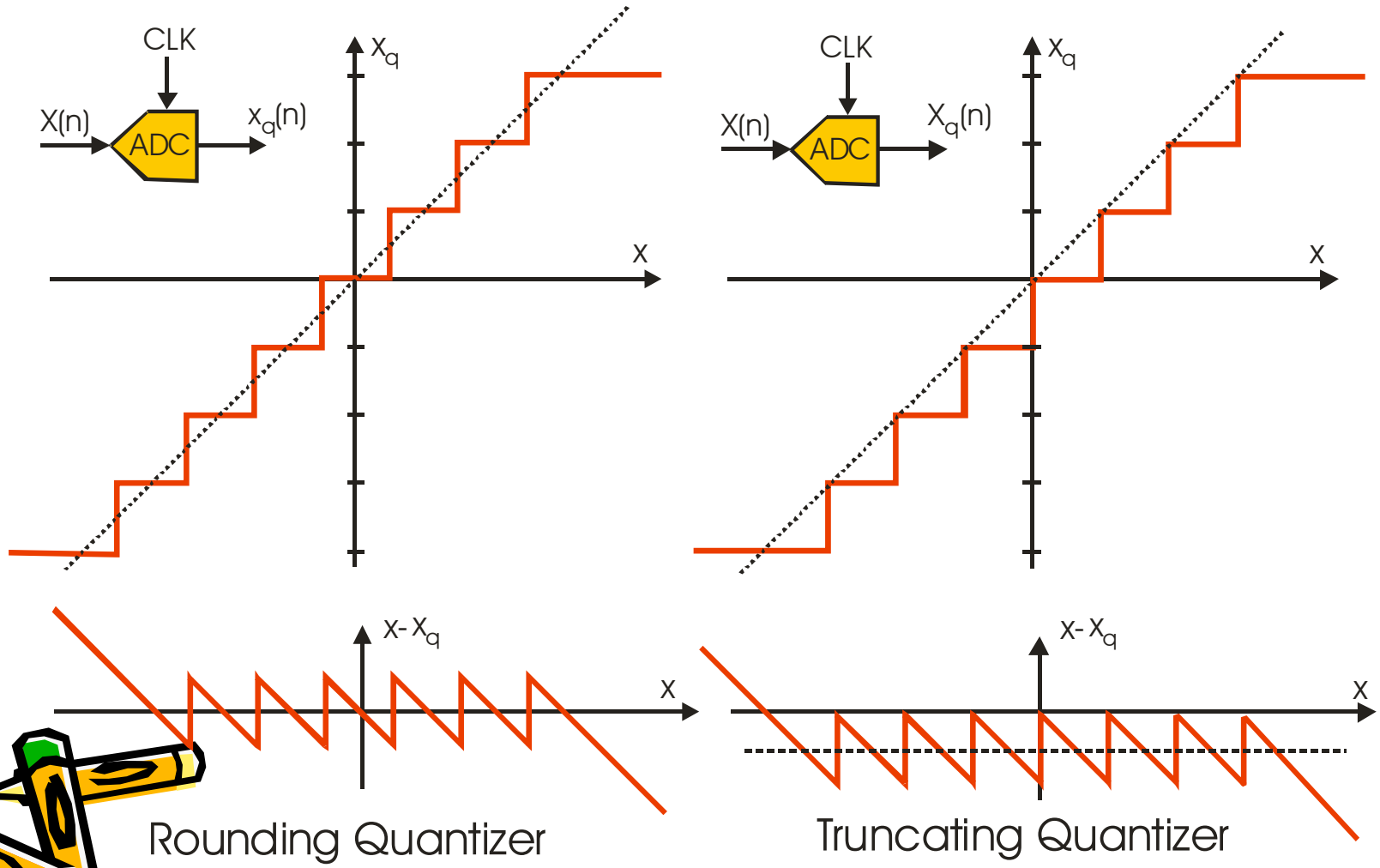

Truncating Quantizer
Highest Allowable Output Value Not Greater than Measured Value

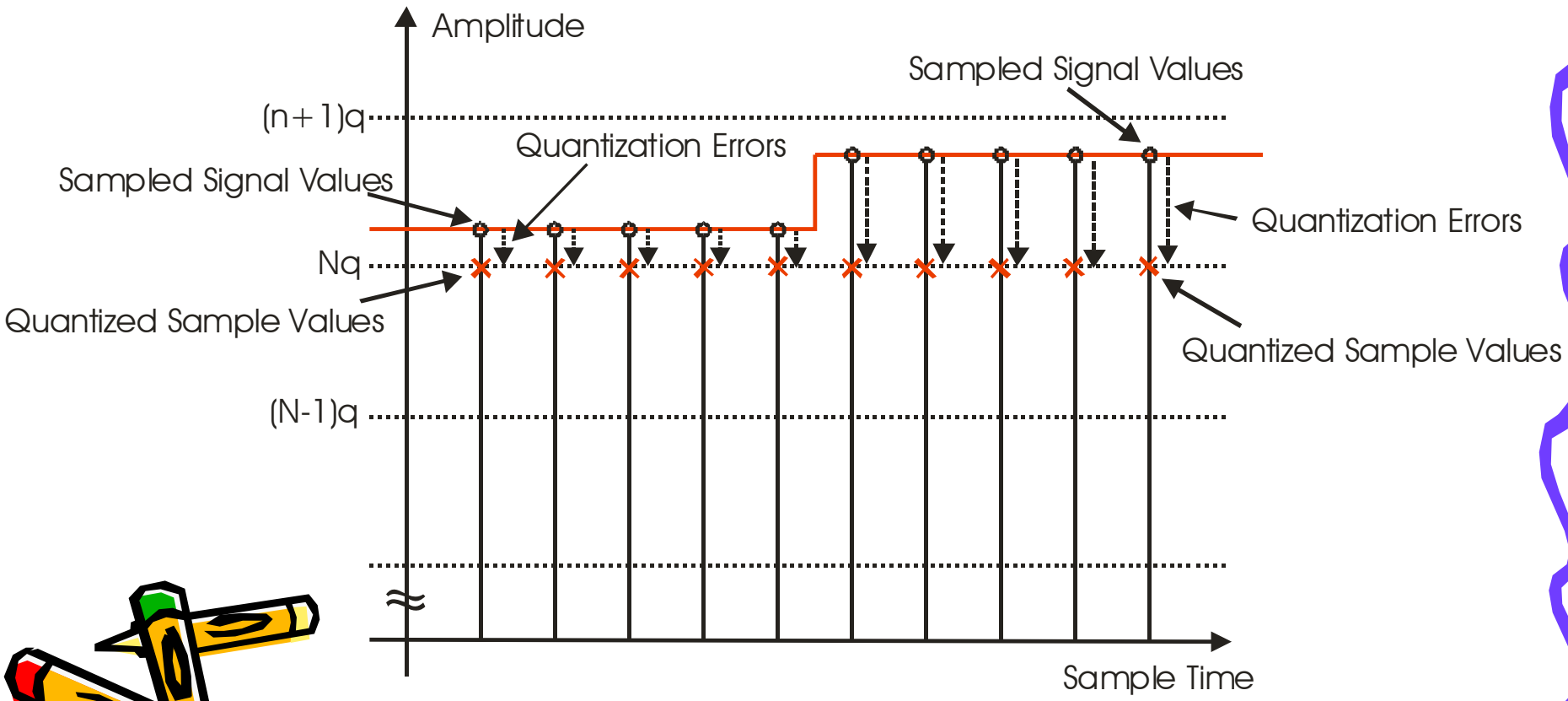

2's Complement Number Representation

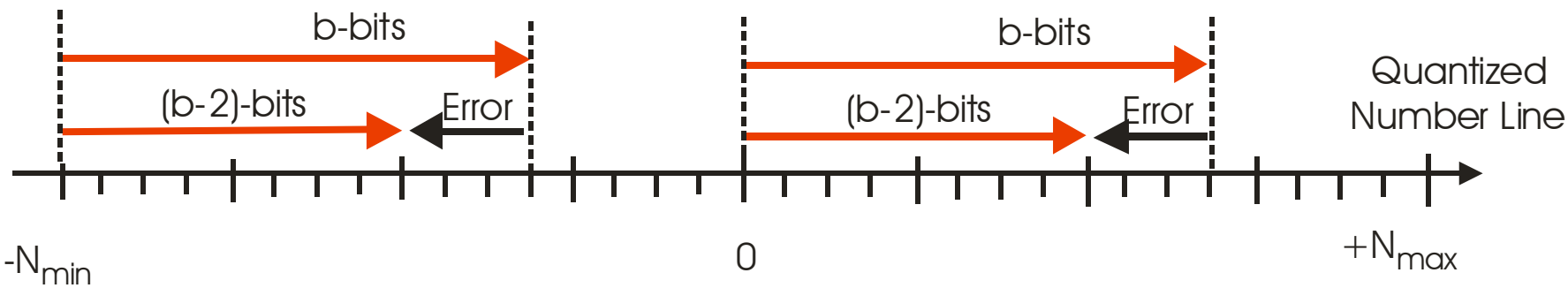

Negative numbers:
Measure displacement from reference.
Reference = -Nmin

Positive numbers:
Measure displacement from reference.
Reference = 0

Errors Due to finite Arithmetic

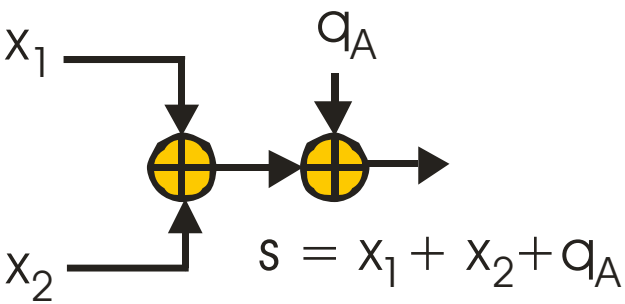

Quantize Addition

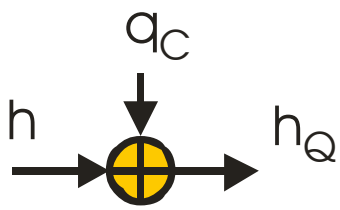

Quantize Coefficient

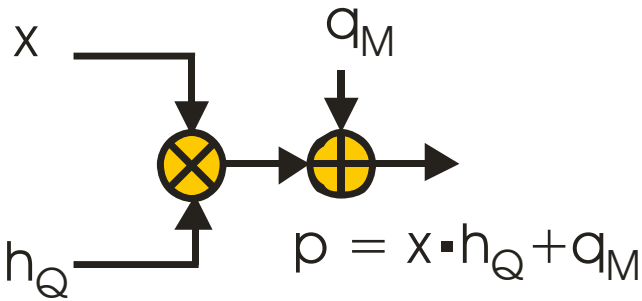

Quantize Multiplication

Finite Arithmetic in Radix-2 FFT Algorithm

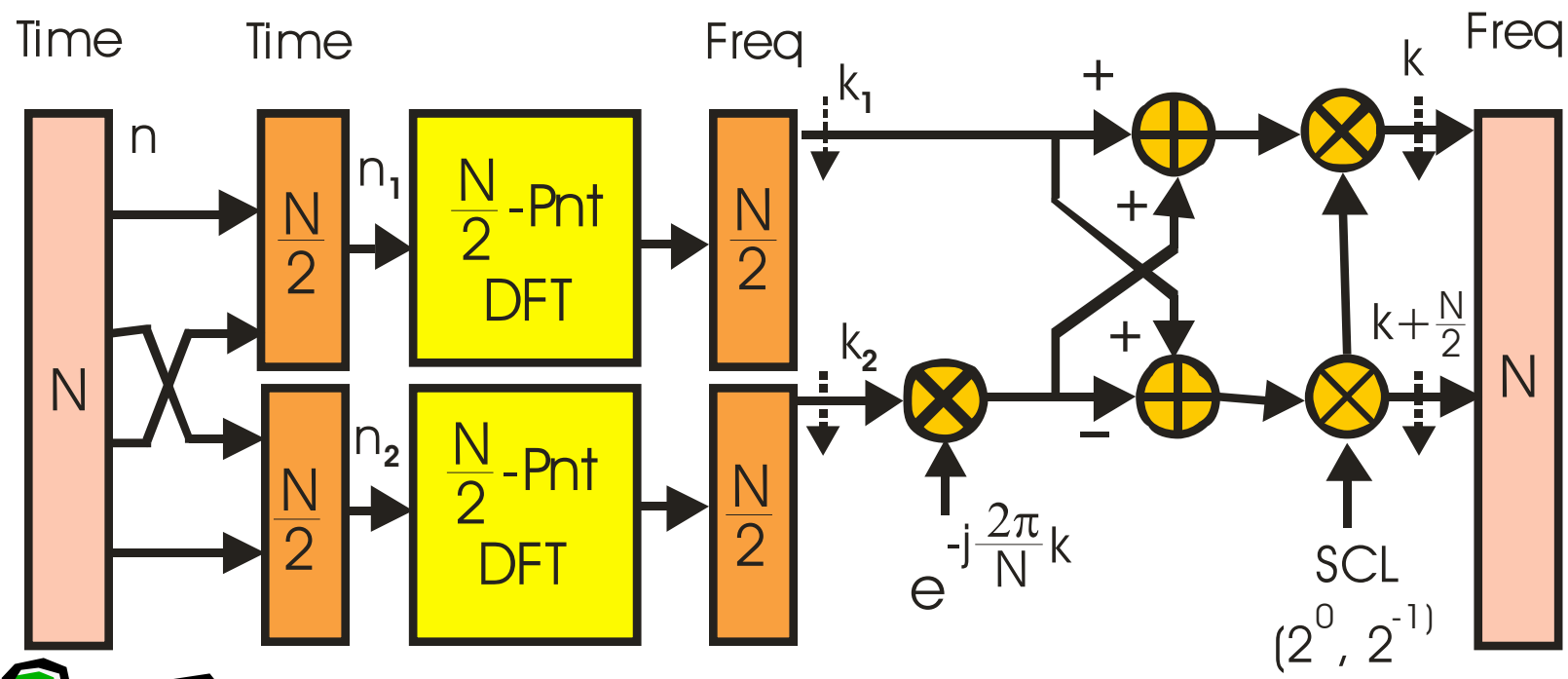

Radix-2 FFT
Signal Flow Diagram

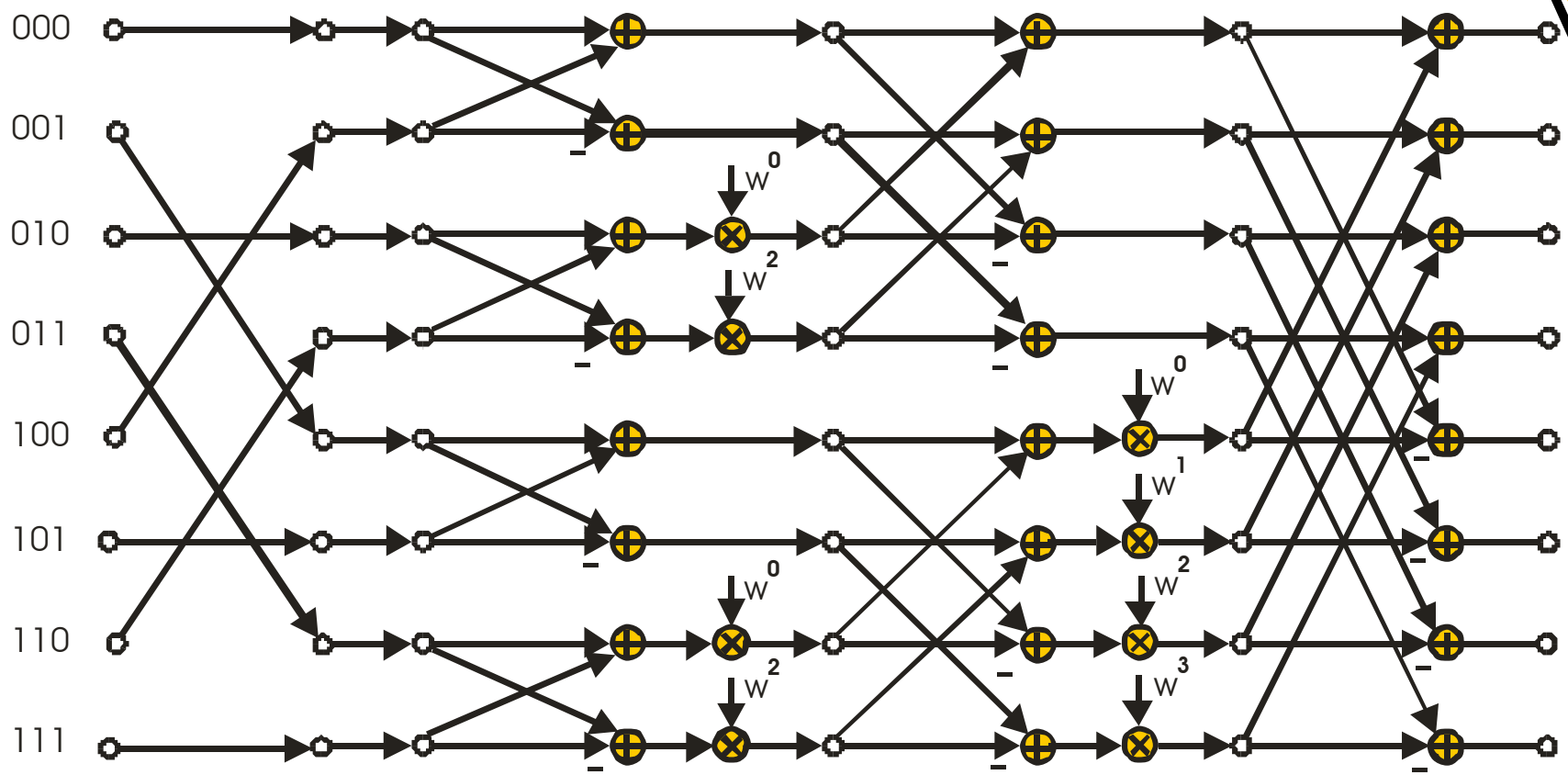

Algorithm Noise Due to Finite Arithmetic, Coefficient Noise

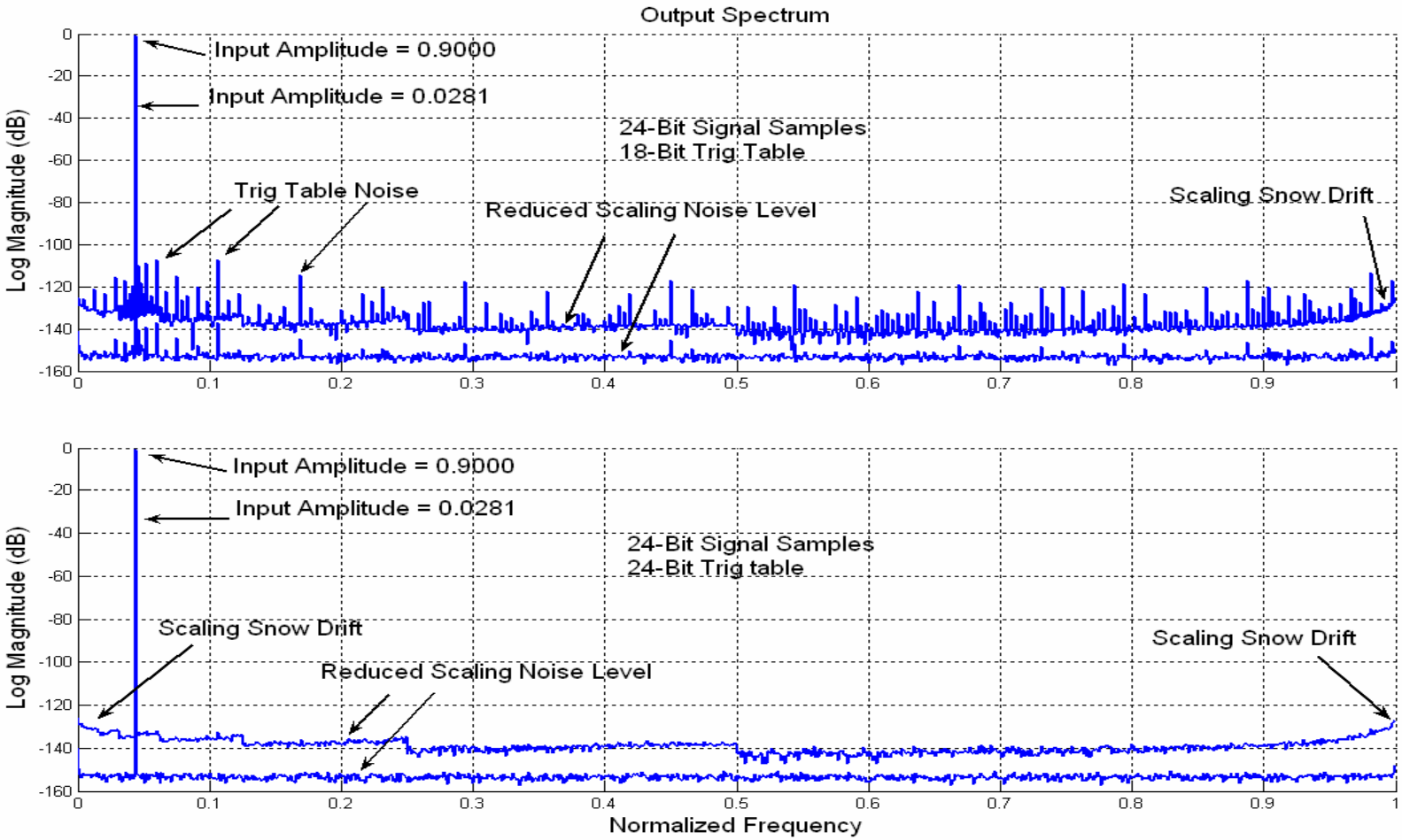

Algorithm Noise due to Finite Arithmetic, Scaling Noise

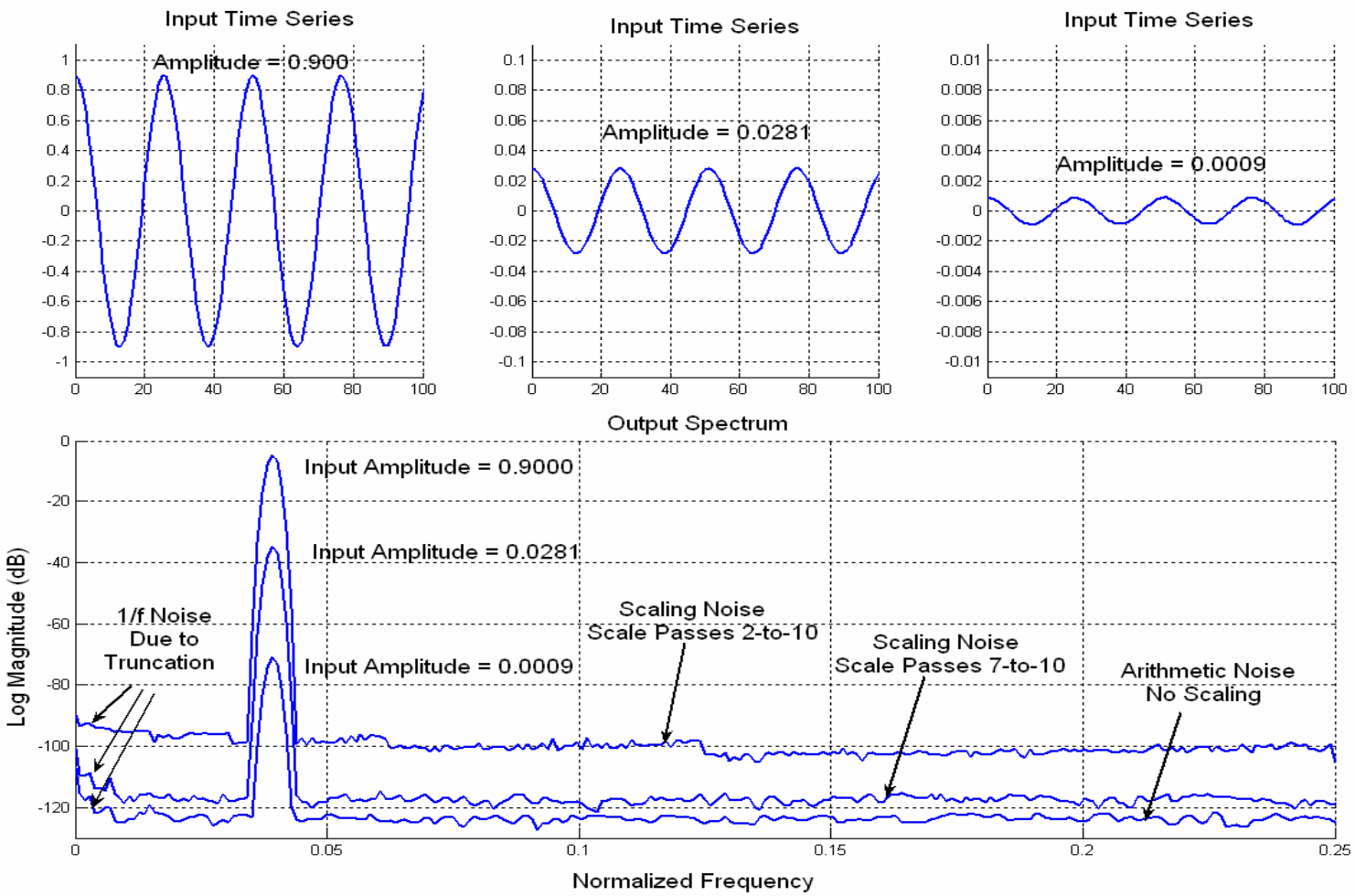

DC Canceller, DC Notch Filter

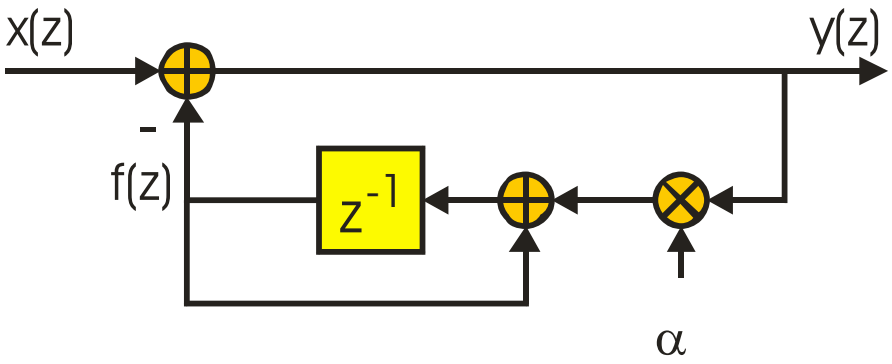

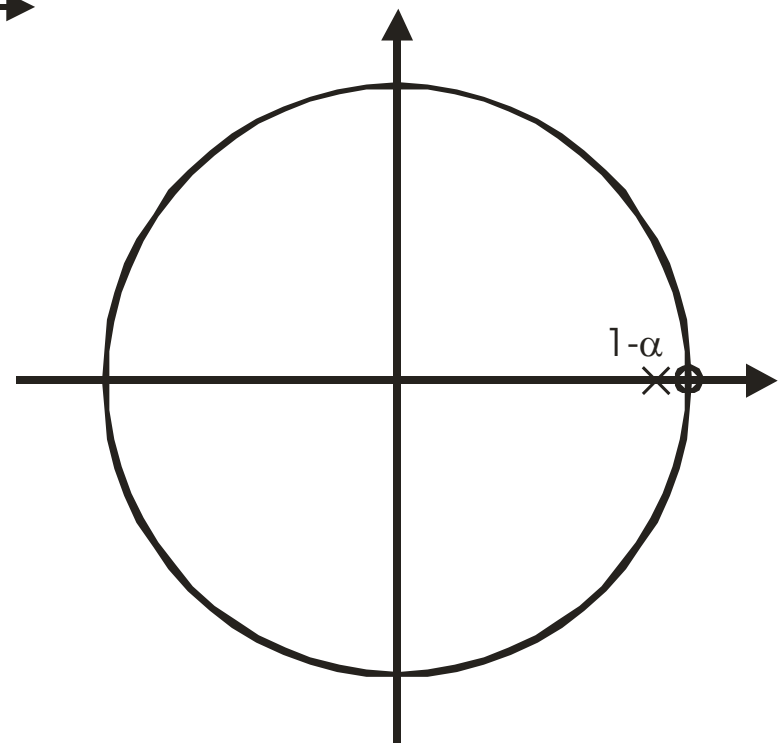

$$H(Z) = \frac{Z - 1}{Z - (1 - \alpha)}$$

Spectral Response

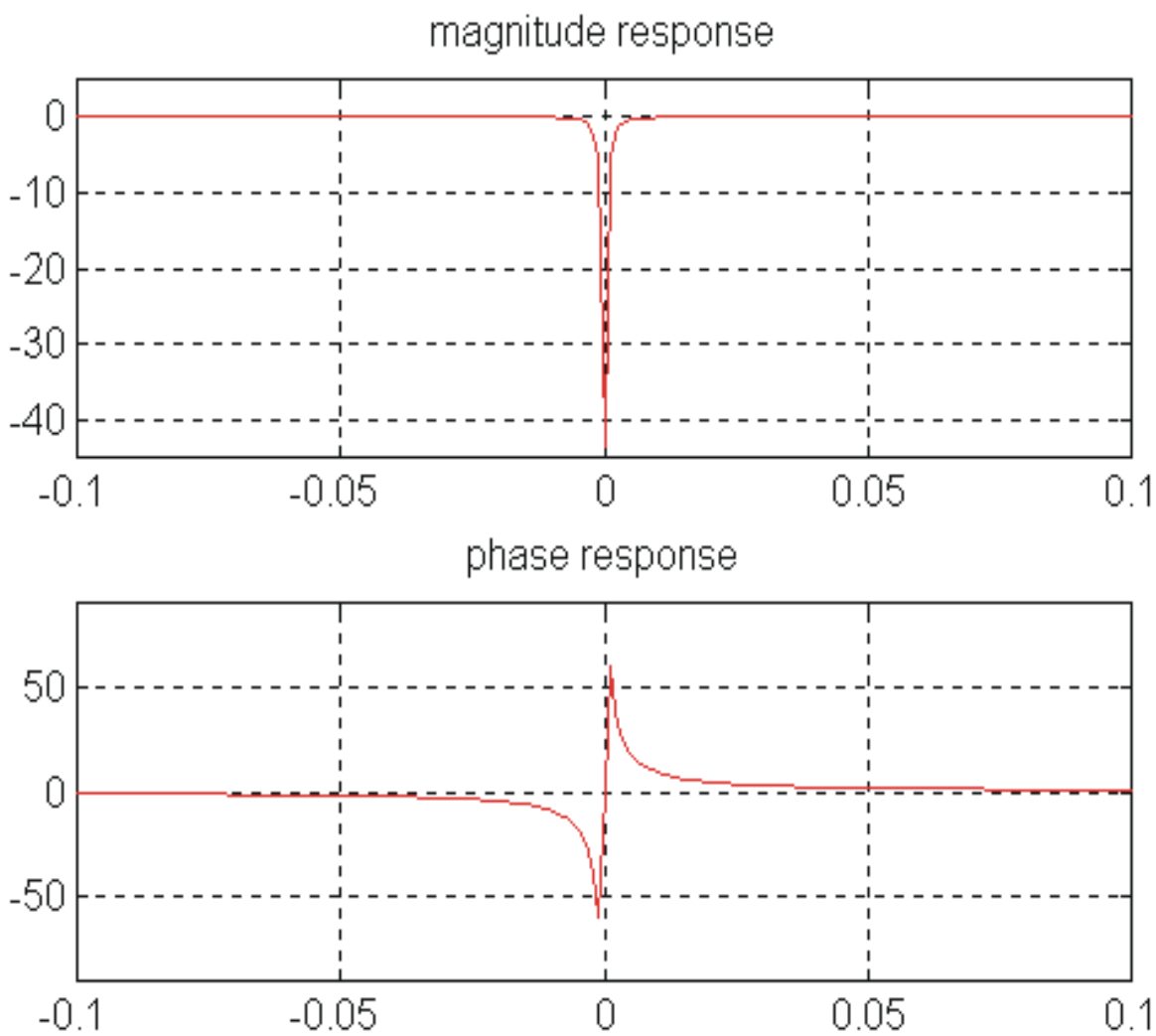

DC Canceller with Embedded Sigma-Delta Converter

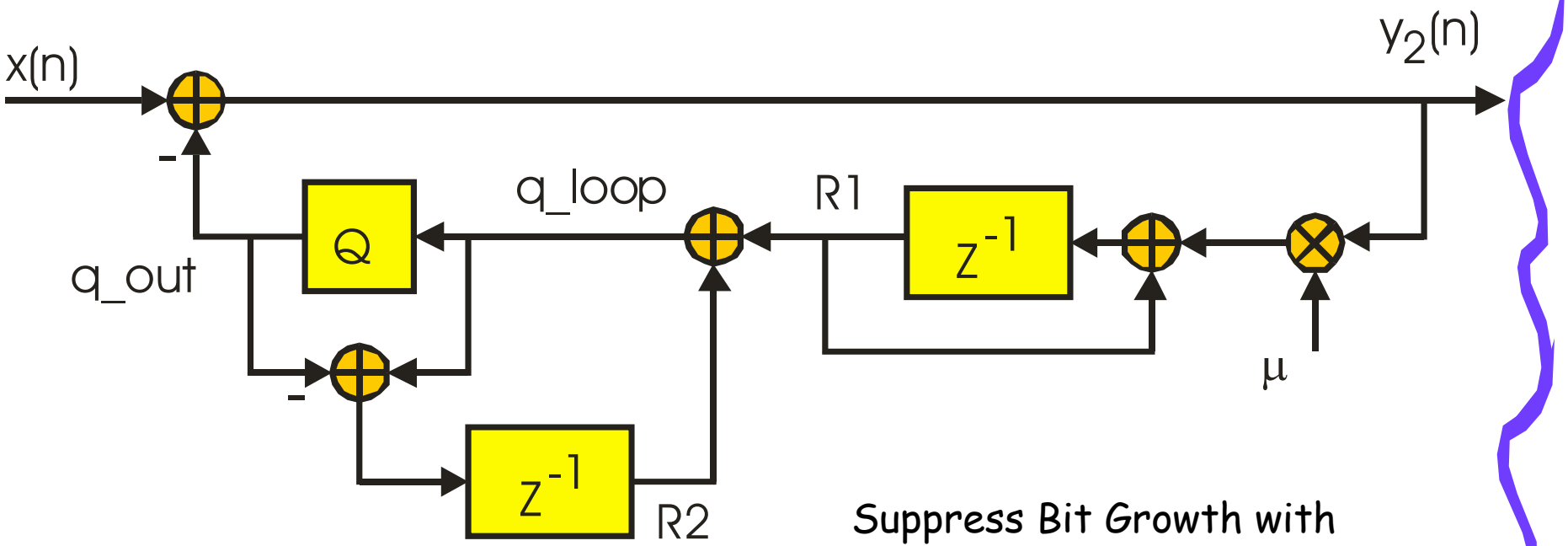

Suppress Bit Growth with Sigma-Delta Converter in Feedback Path

DC Canceller Time Series

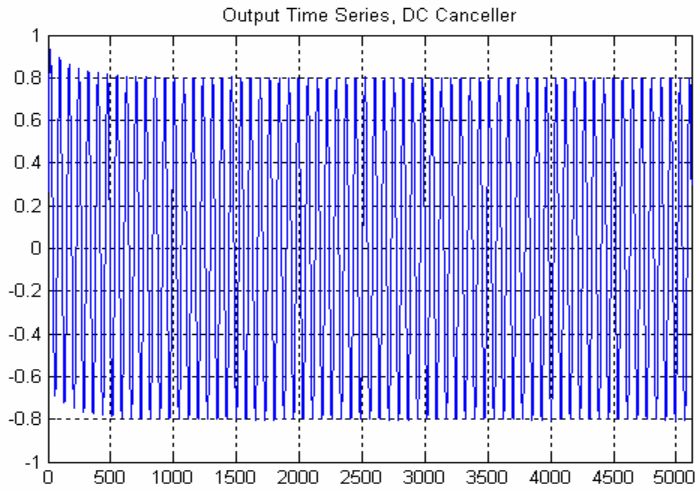

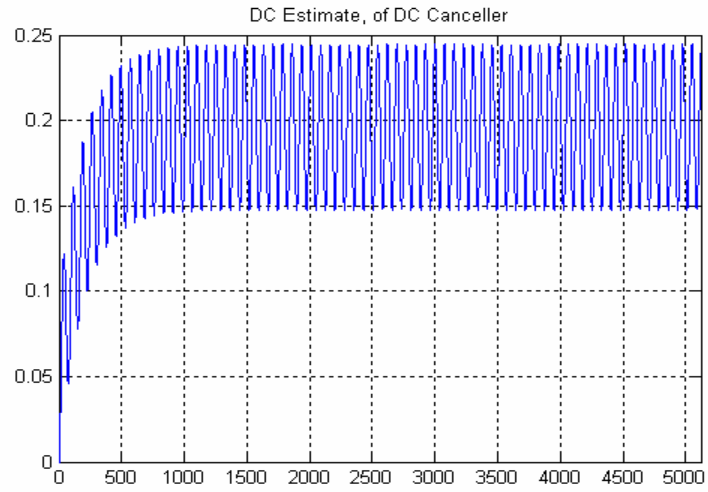

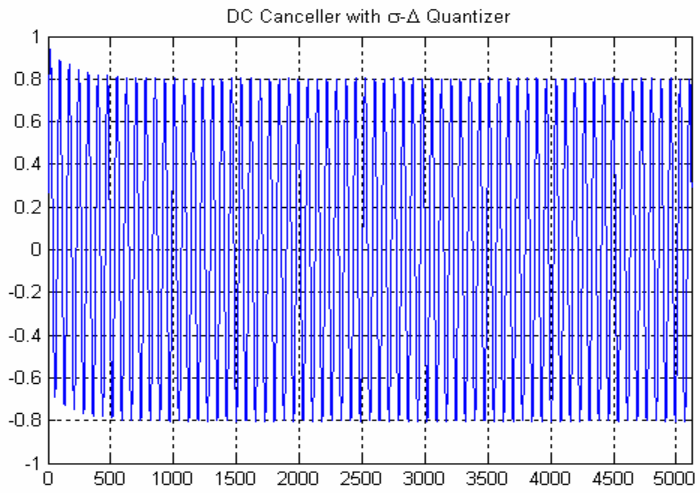

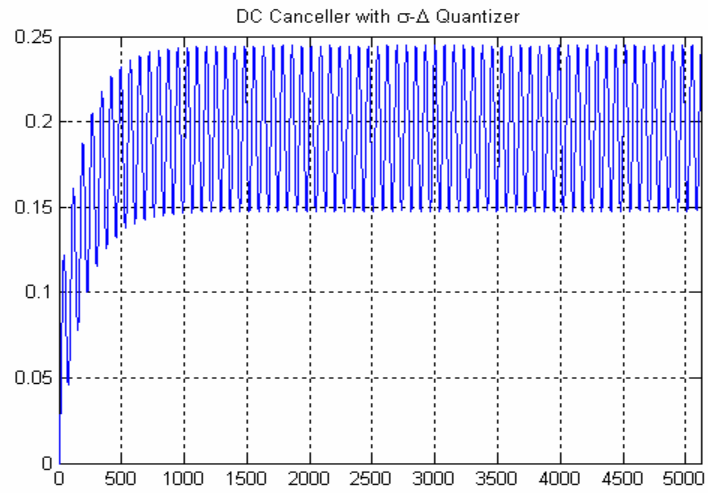

Spectra
Input and Output of Canceller

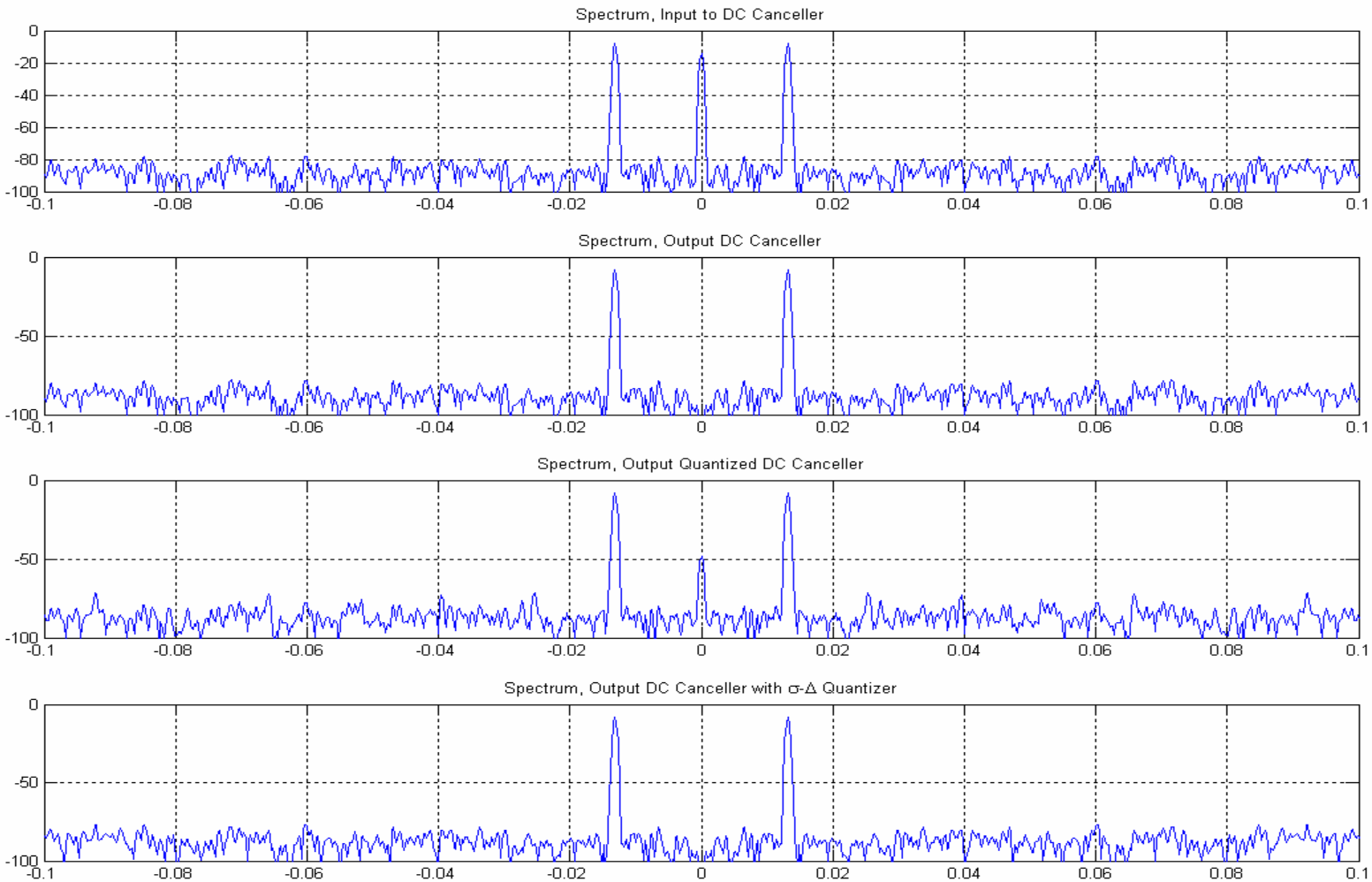

Tunable Notch, Spin the Delay Line

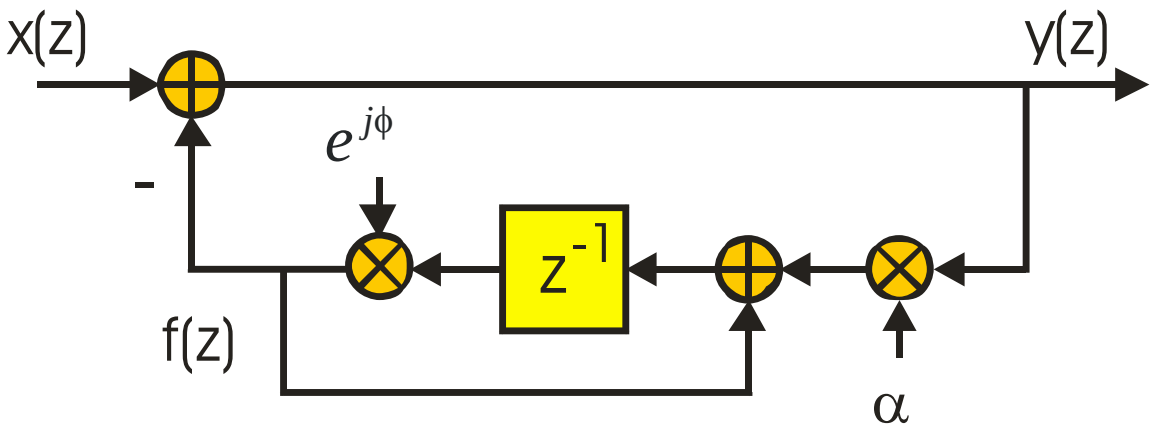

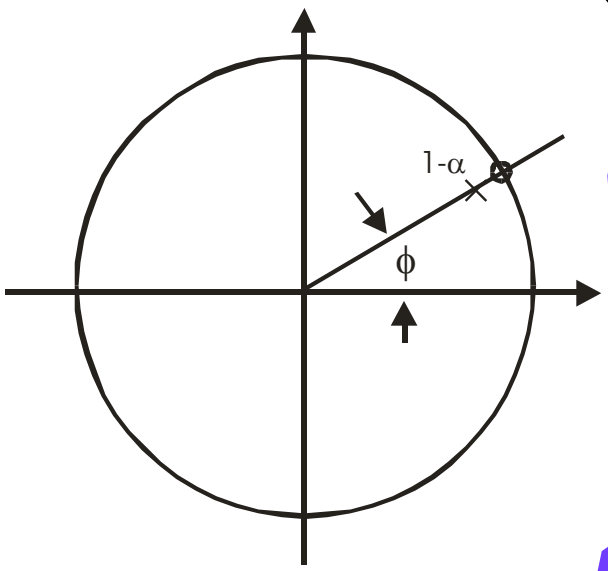

$$H(Z) = \frac{Z - e^{j\phi}}{Z - (1-\alpha)e^{j\phi}}$$

Spectral Response

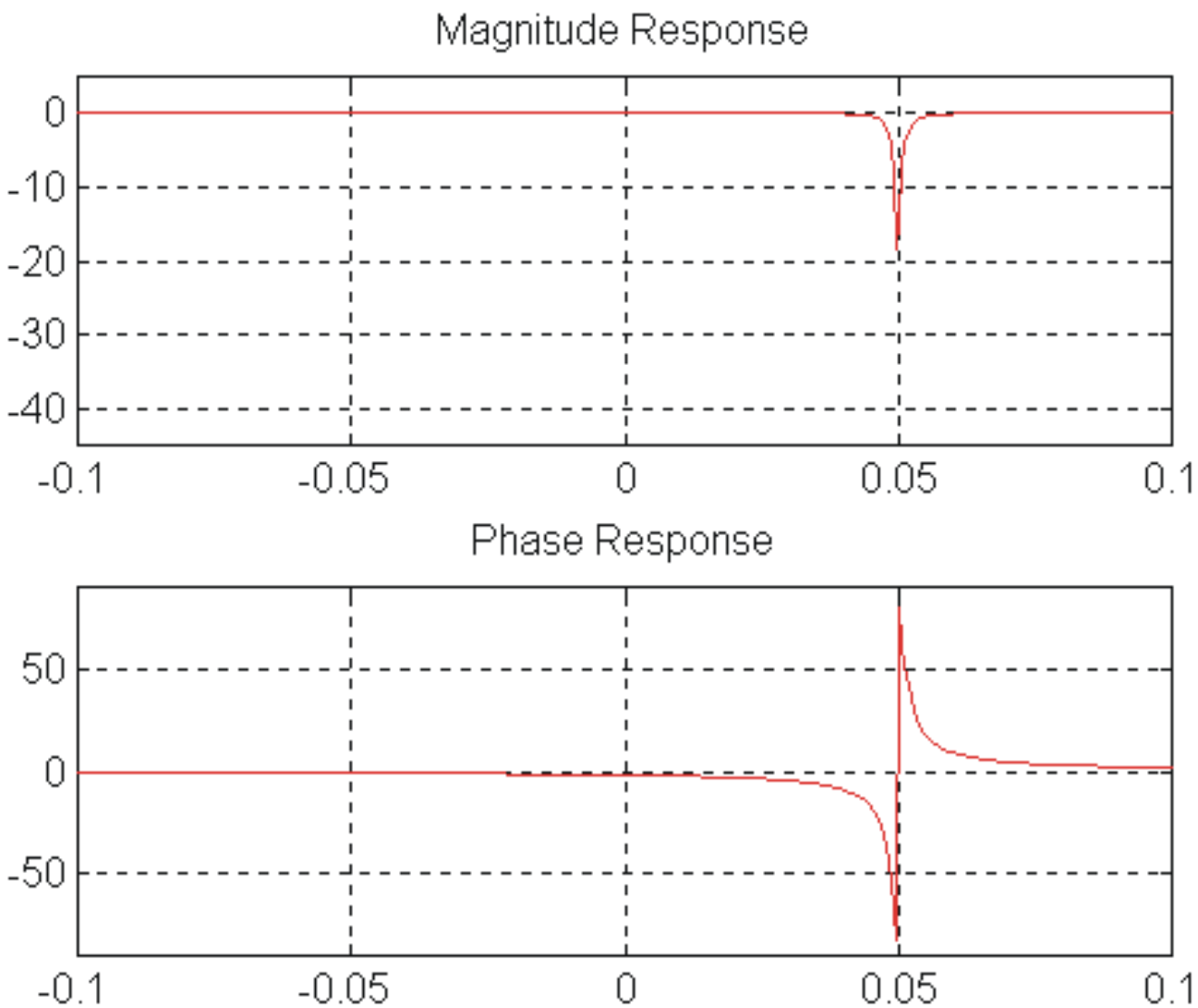

Tuning With LP-to-BP Transformation

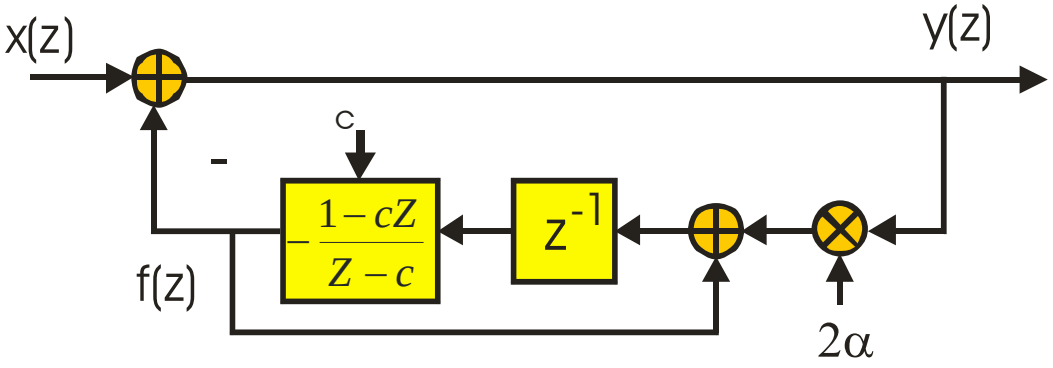

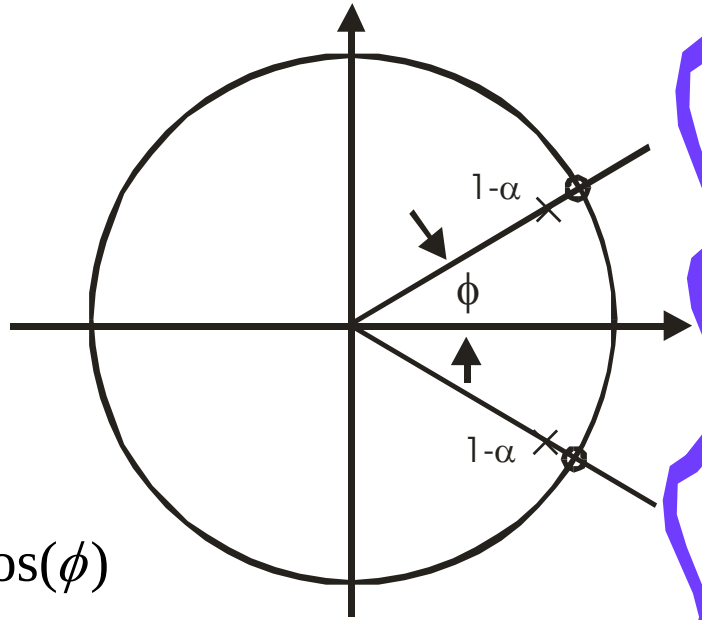

$$H(Z) = \frac{Z^2 - 2cZ + 1}{Z^2 - 2c(1-\alpha)Z + (1-2\alpha)} : c = \cos(\phi)$$

Implementing LP-to-BP Transformation

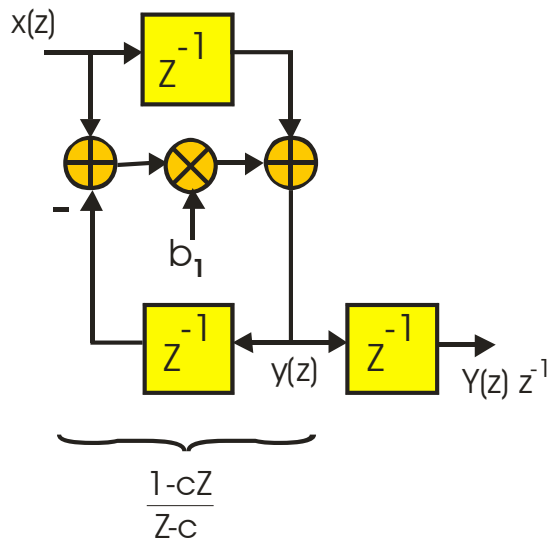

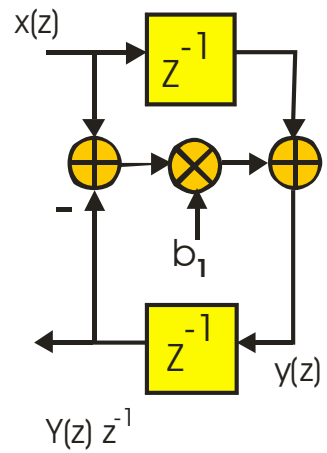

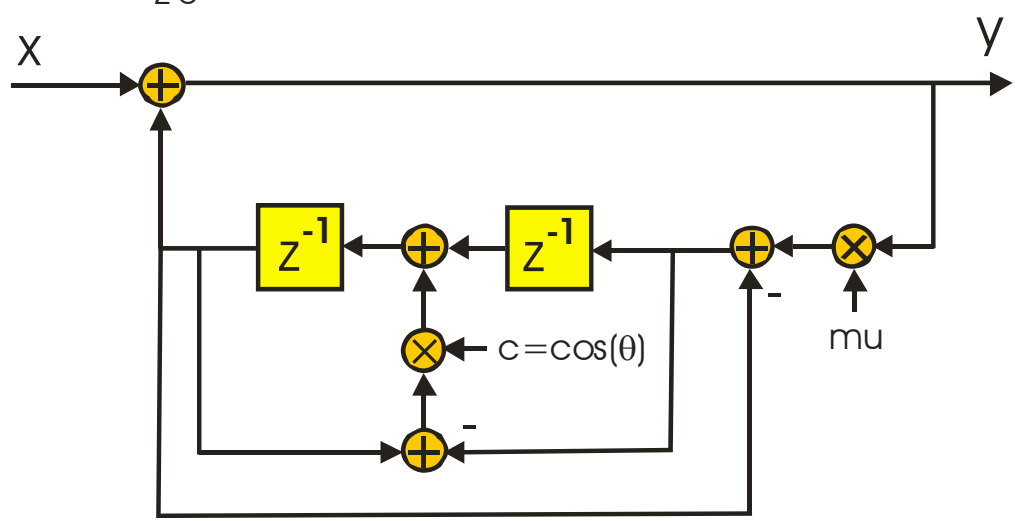

Spectral Response

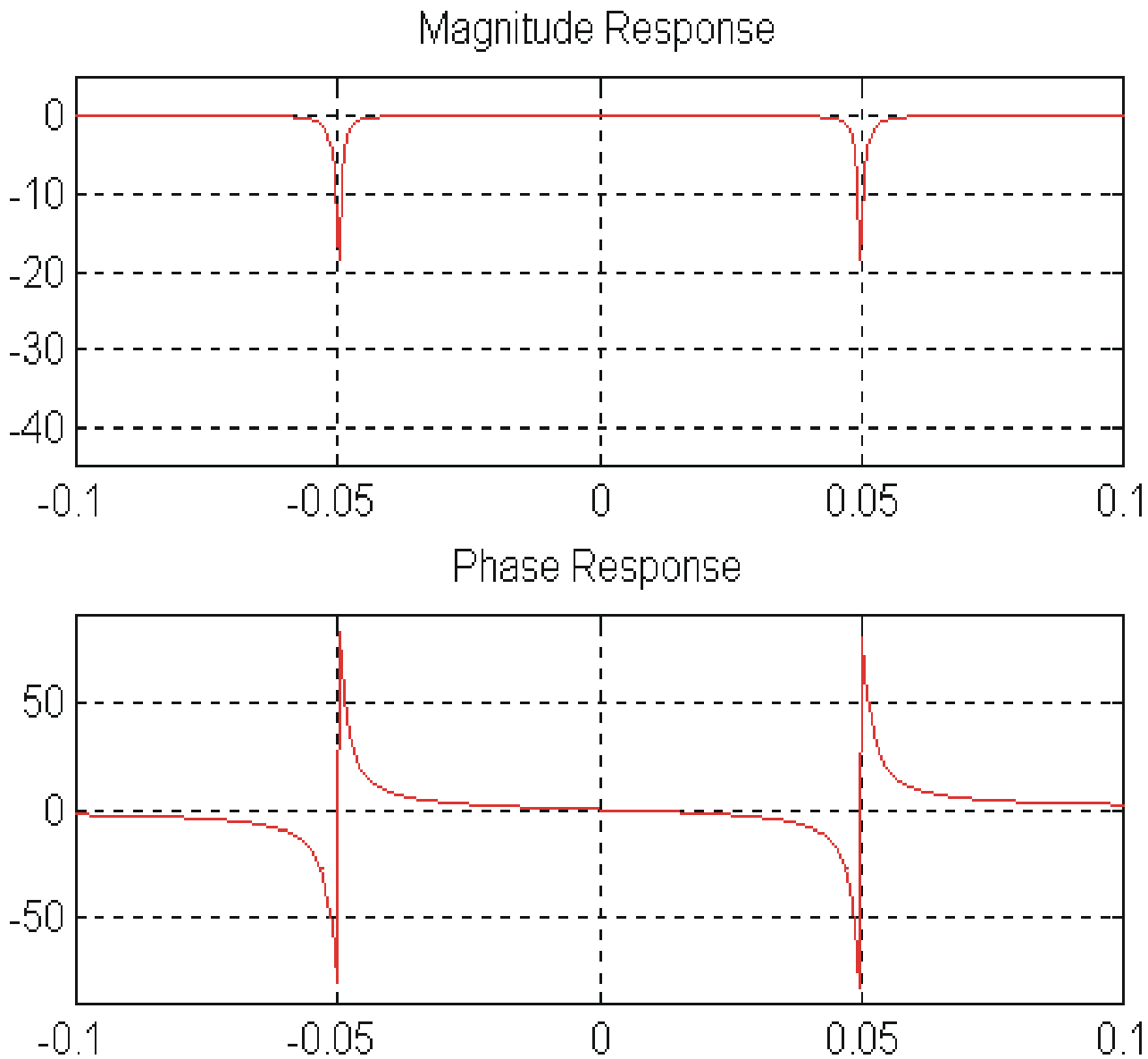

Self Tuning: Reference Canceling

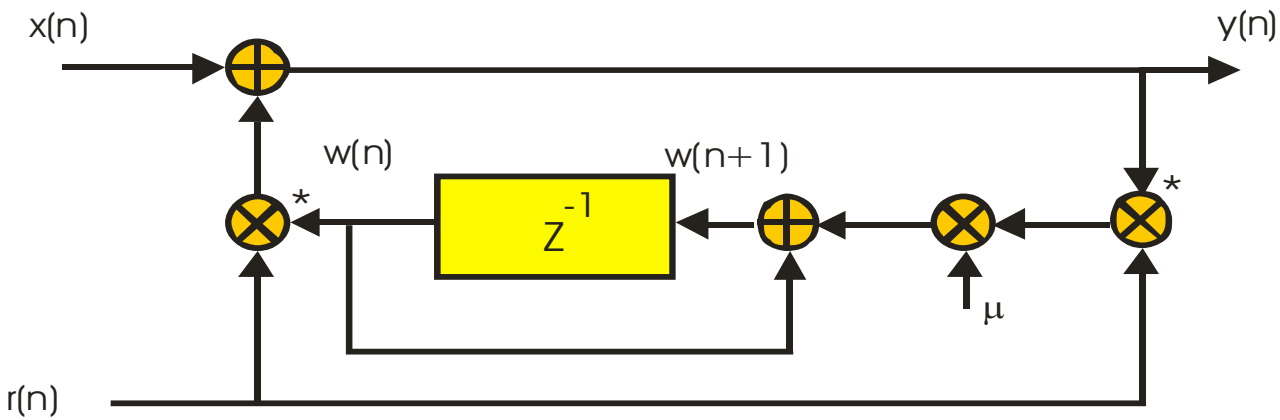

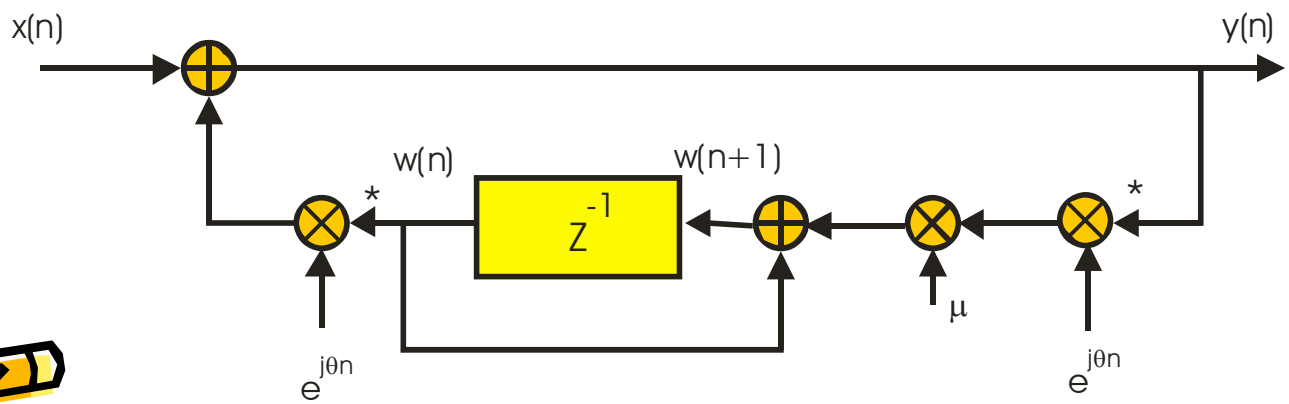

Filters have Same Transfer Function

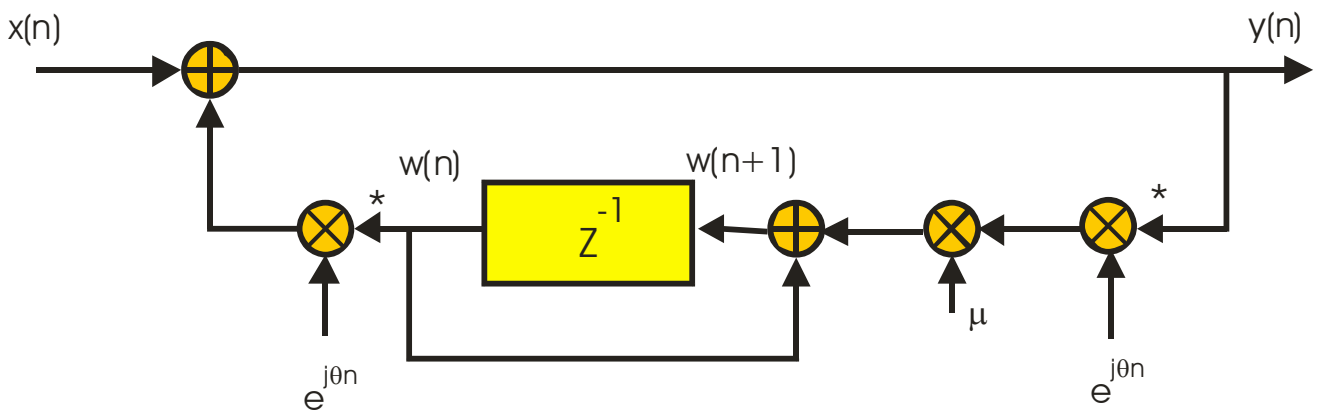

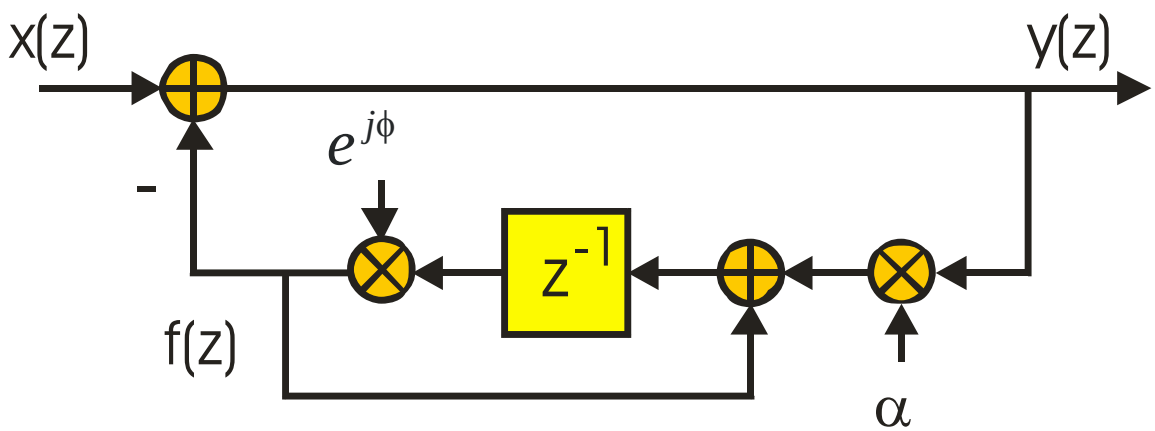

I-Q Imbalance

Ideal I-Q Mixing

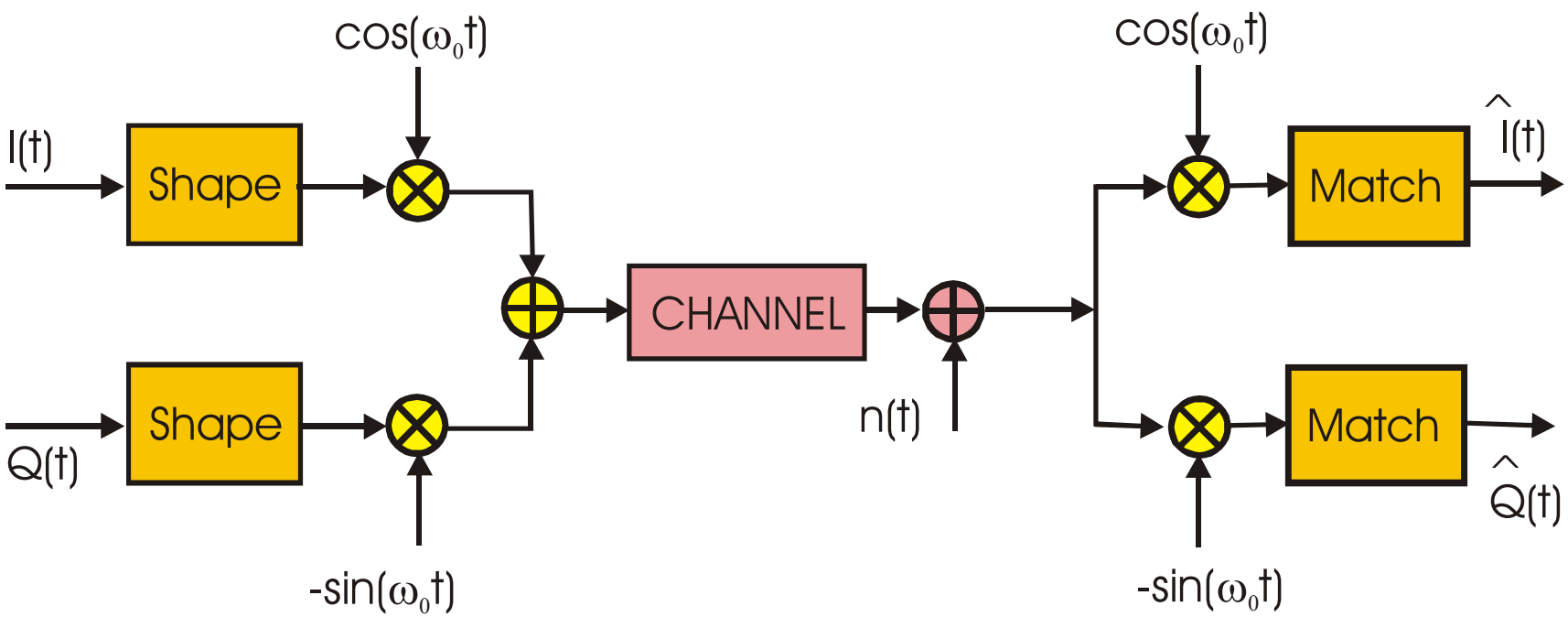

Real Sinusoids, Time and Frequency

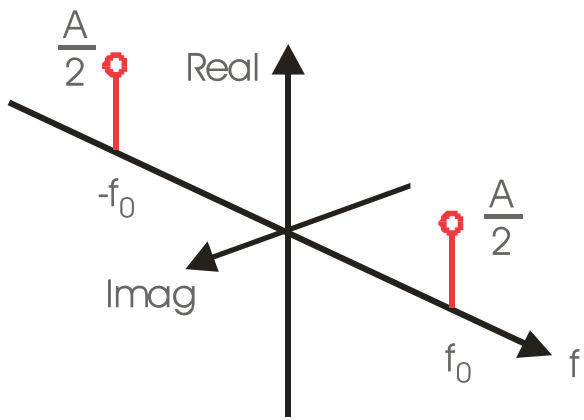

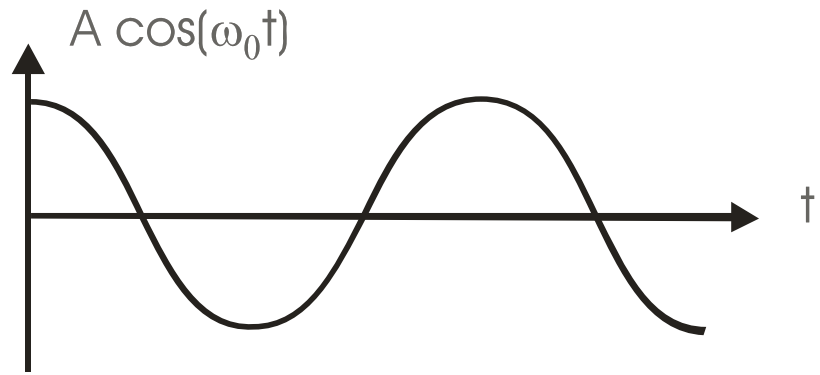

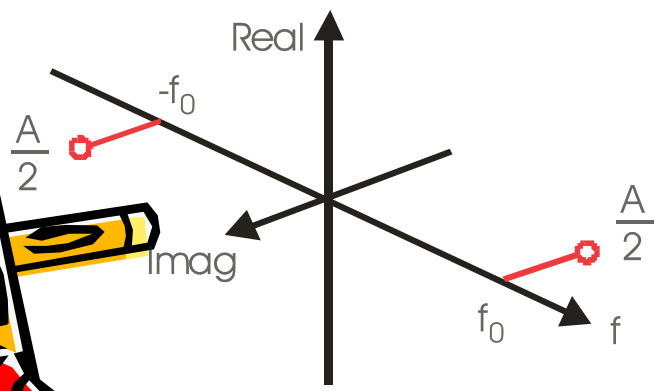

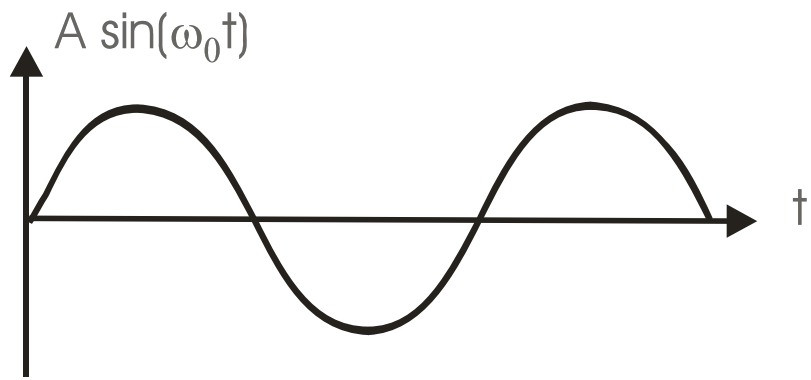

Complex Sinusoids-I

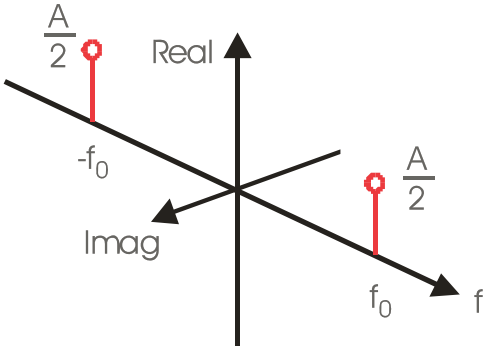

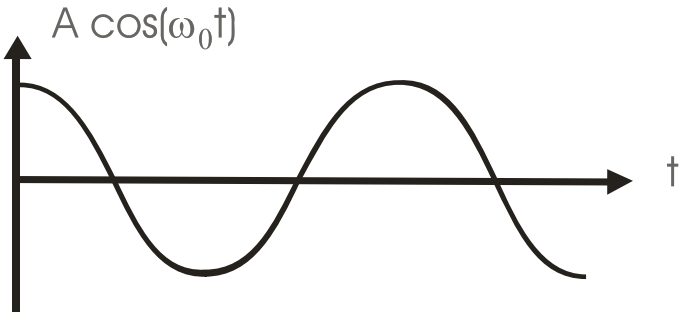

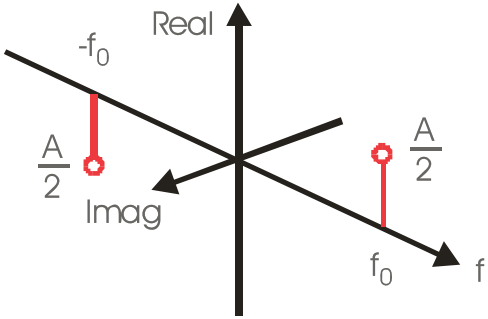

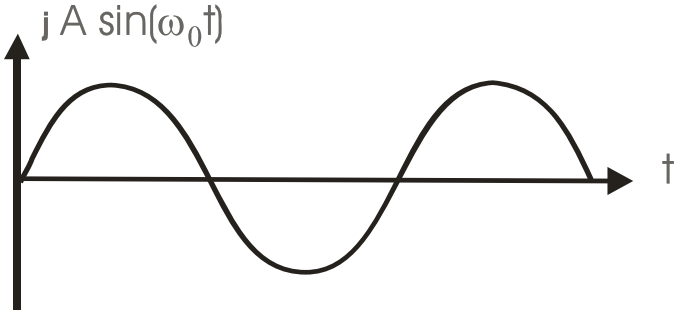

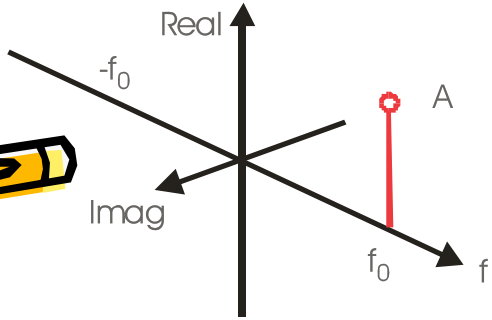

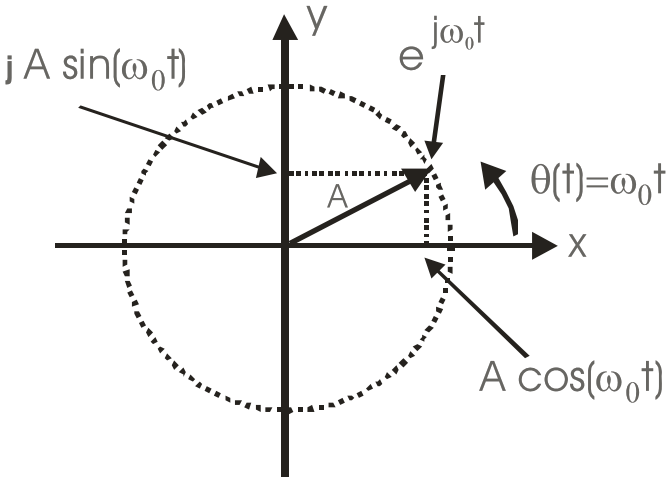

Complex Sinusoids-II

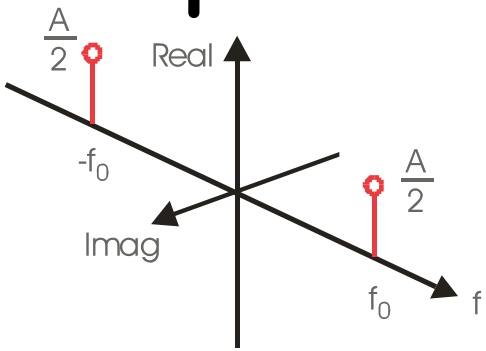

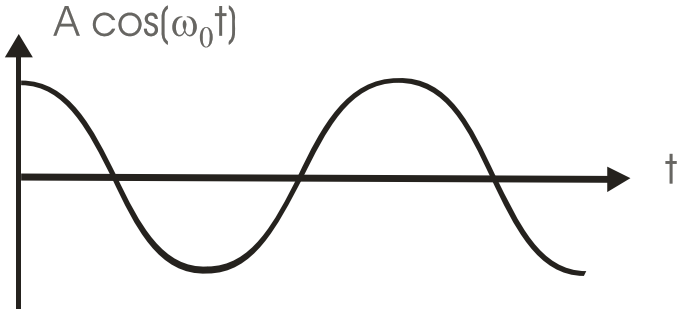

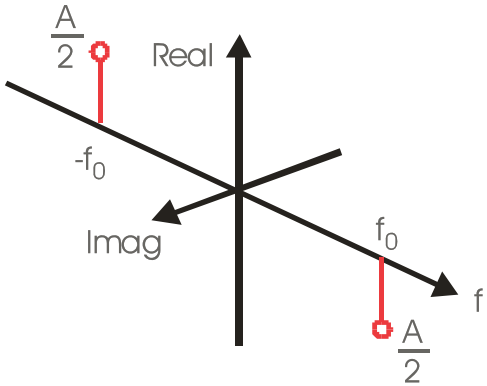

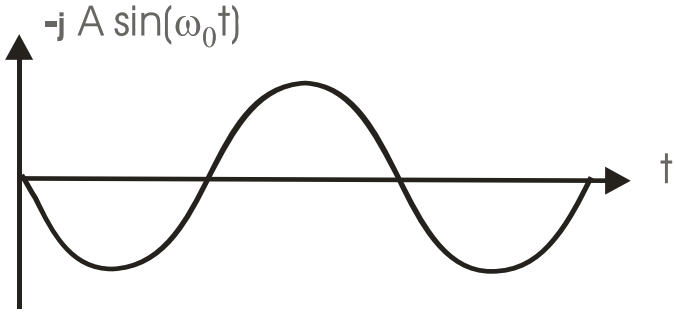

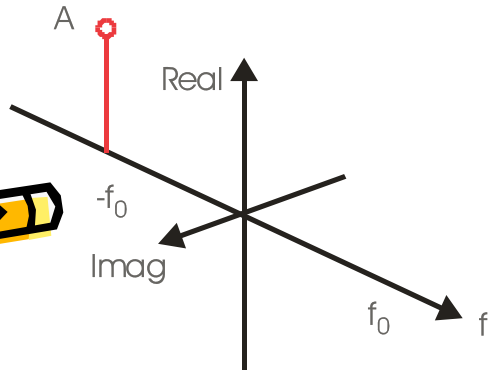

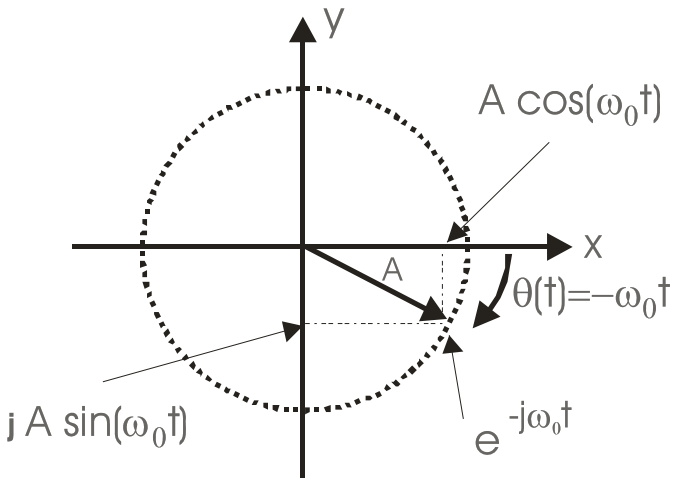

Imbalance: New Spectral Terms

$\mathcal{X}=\{A\cos(2\pi f_0 t)\}$

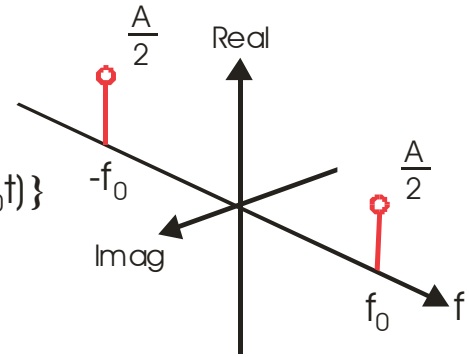

$\mathcal{X}=\mathcal{F}\{A\cos(2\pi f_0 t)\}$

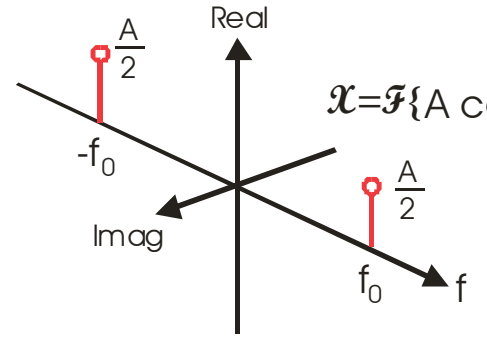

$i\,\mathcal{Y}=\{i\ A\sin(2\pi f_0 t)\}$

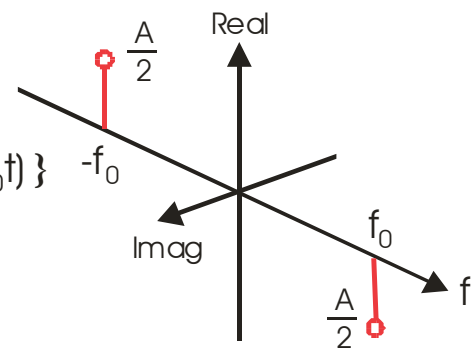

$i\,\mathcal{Y}=\mathcal{F}\{i(1+\varepsilon)\,A\sin(2\pi f_0 t+\alpha)\}$

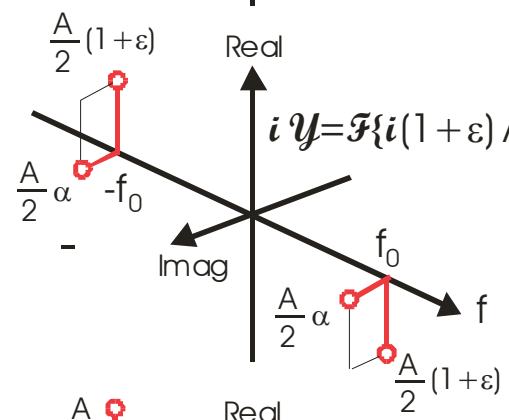

$\mathcal{X}+i\,\mathcal{Y}=\{A\exp(j\,2\pi f_0 t)\}$

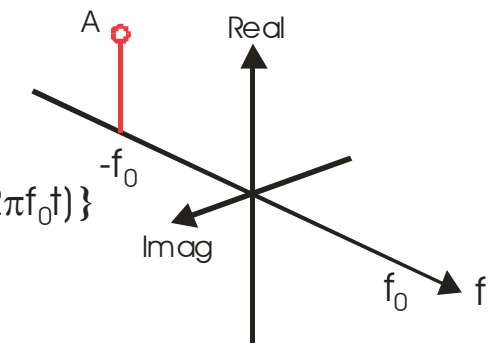

$\mathcal{X}+i\,\mathcal{Y}=\mathcal{F}\{sum\}$

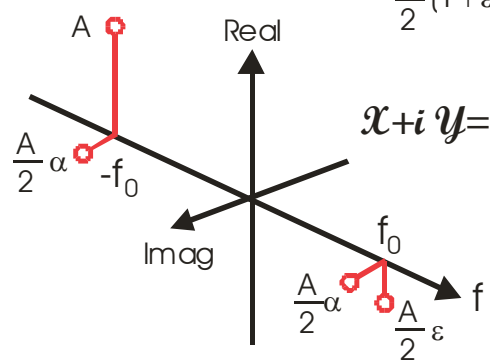

Arbitrary Signals, Time and Frequency

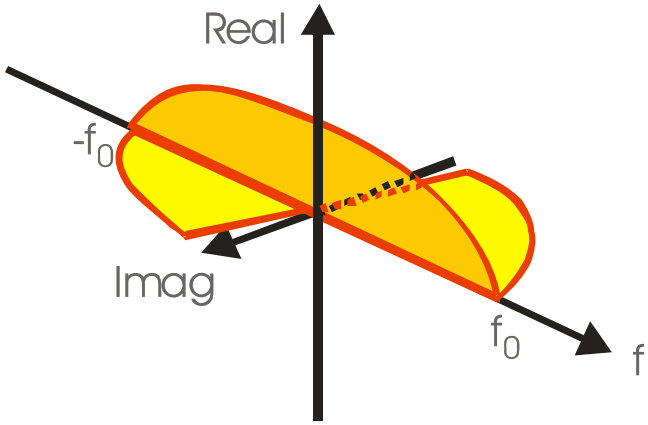

Real Signal: Hermitian Transform

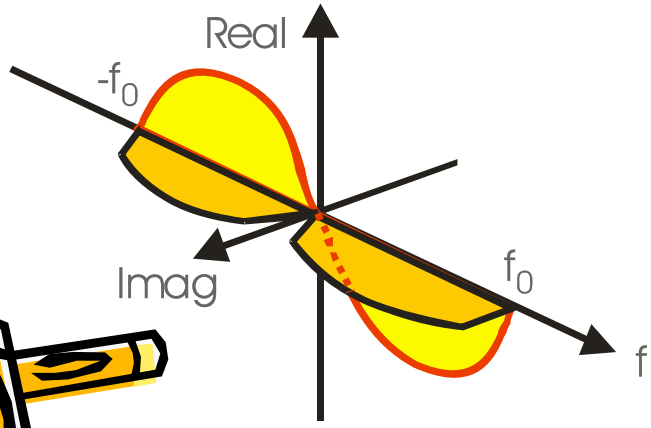

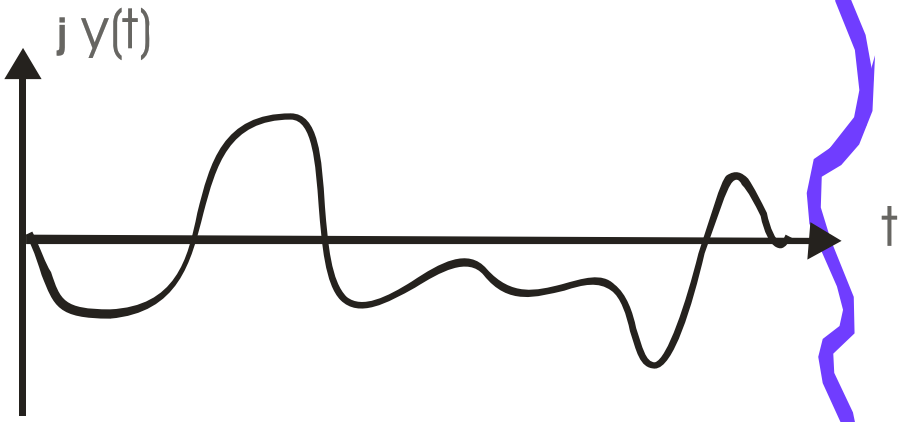

Imaginary Signal: Anti-Hermitian Transform

Complex Baseband & Complex Band-Centered

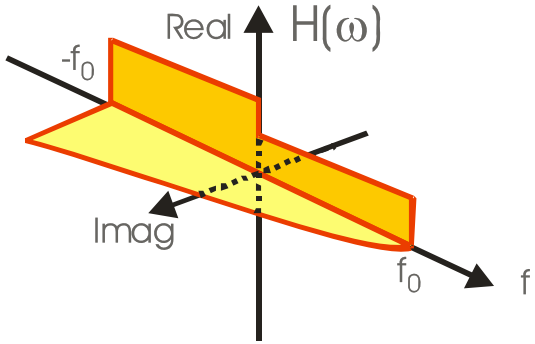

[x(t)+jy(t)]

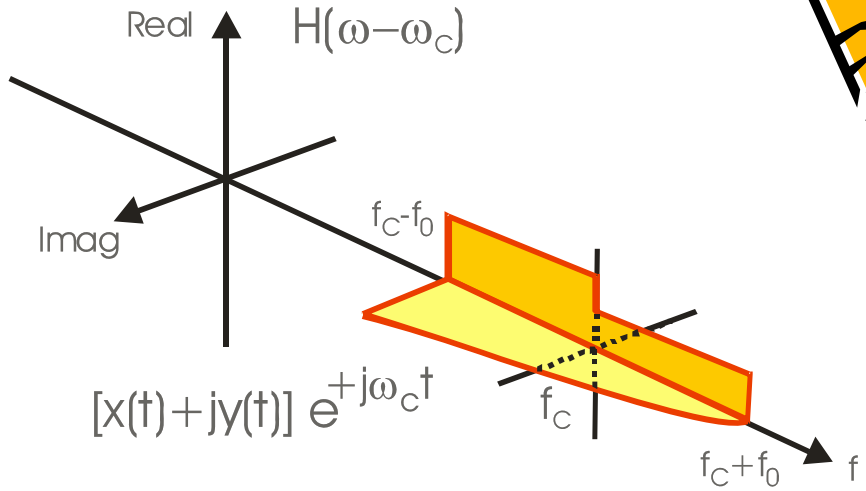

[x(t)+jy(t)] $e^{+j\omega_c t}$

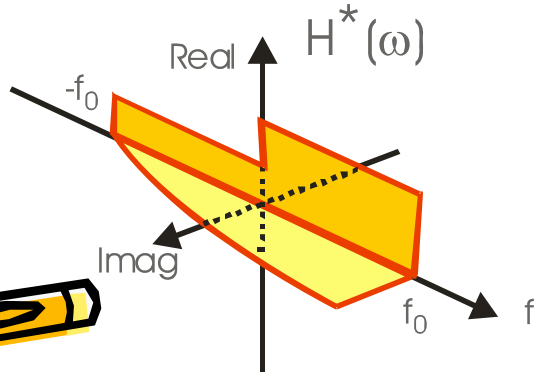

[x(t)-jy(t)]

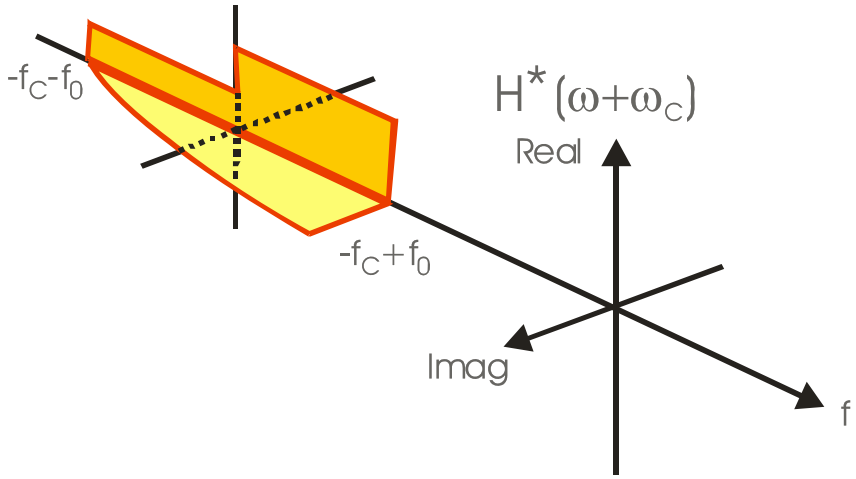

[x(t)-jy(t)] $e^{-j\omega_c t}$

Complex Baseband & Real Band-Centered

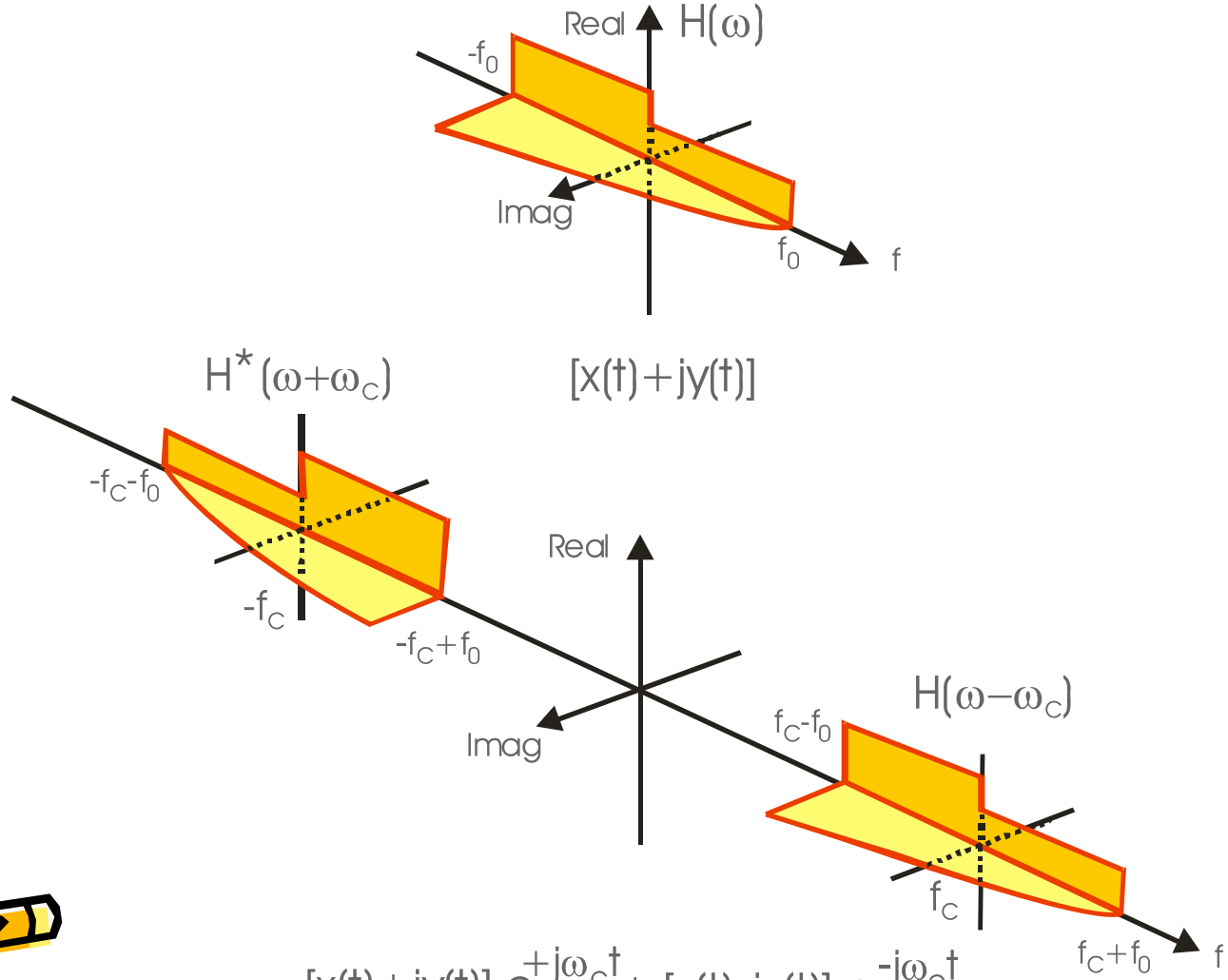

$$[x(t)+jy(t)]\, e^{+j\omega_c t} + [x(t)-jy(t)]\, e^{-j\omega_c t}$$

$$x(t)\cos(\omega_c t) - y(t)\sin(\omega_c t)$$

Complex Down Conversion

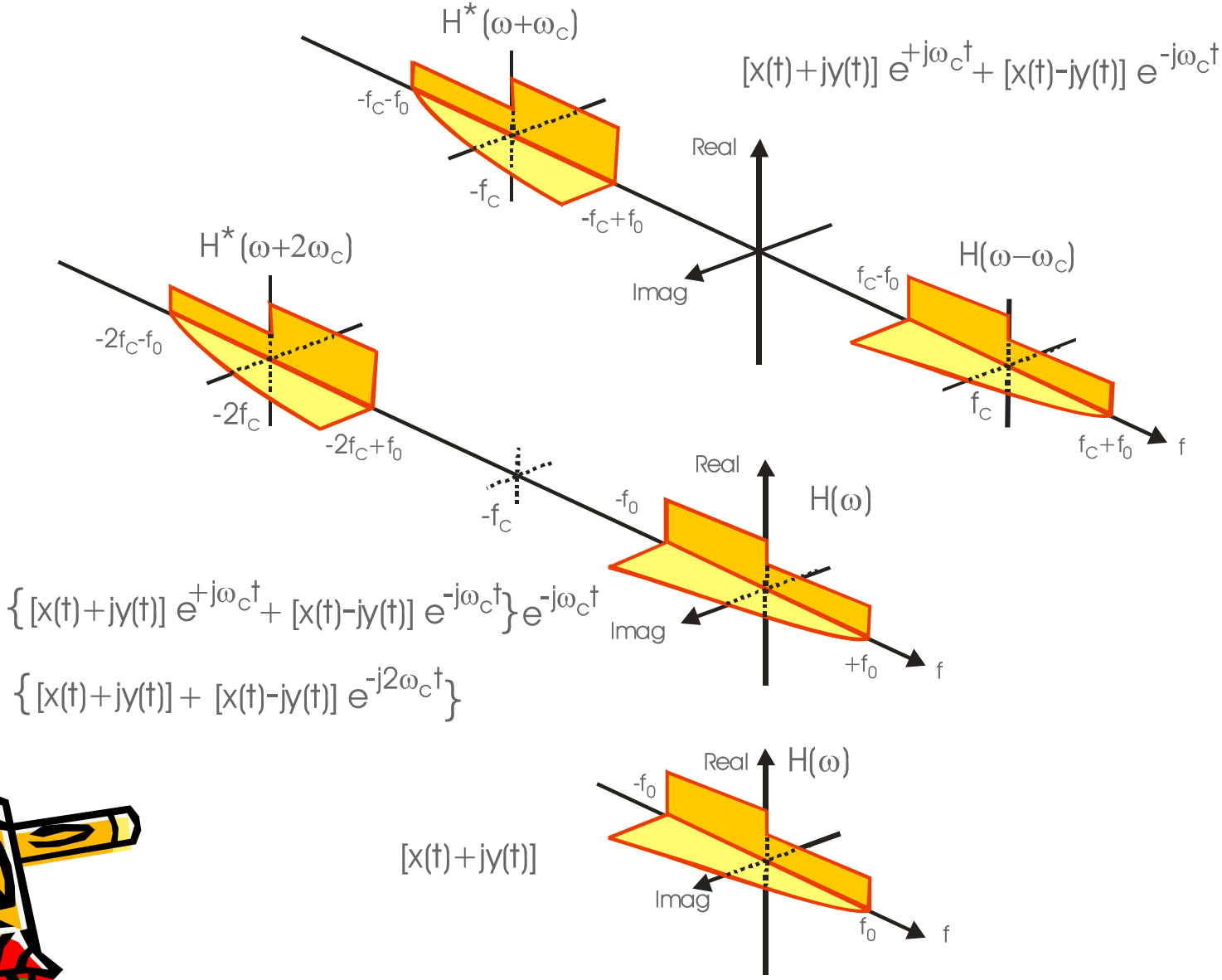

Gain and Phase Imbalance in I-Q Mixers

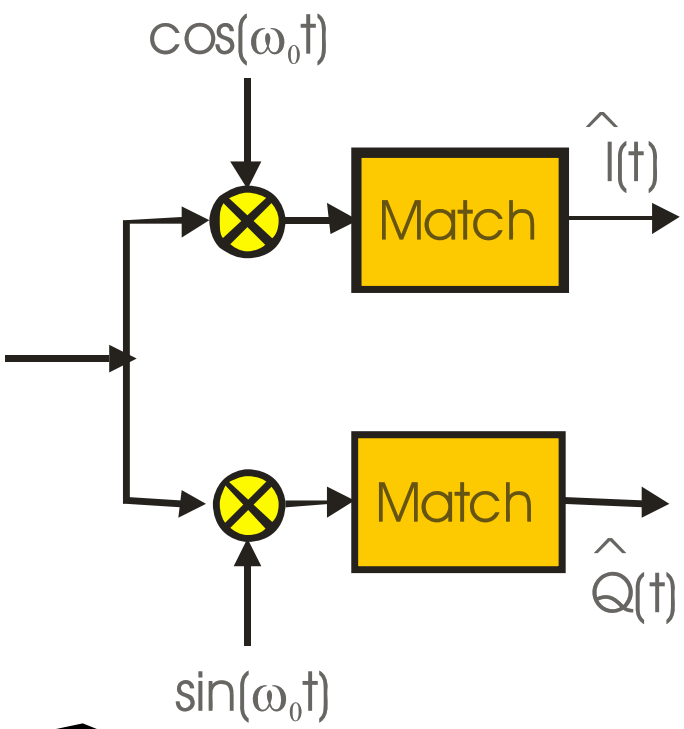

Balanced

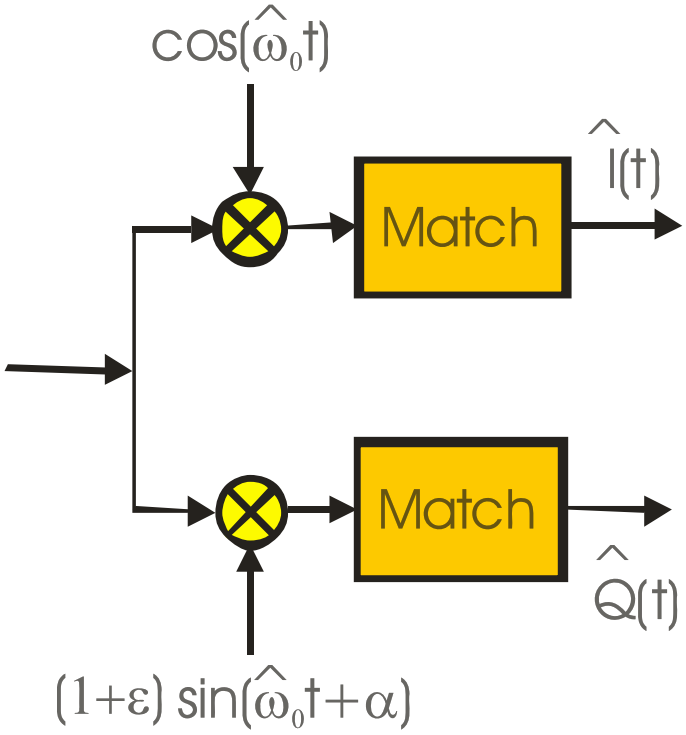

Imbalanced

Balanced Mixers

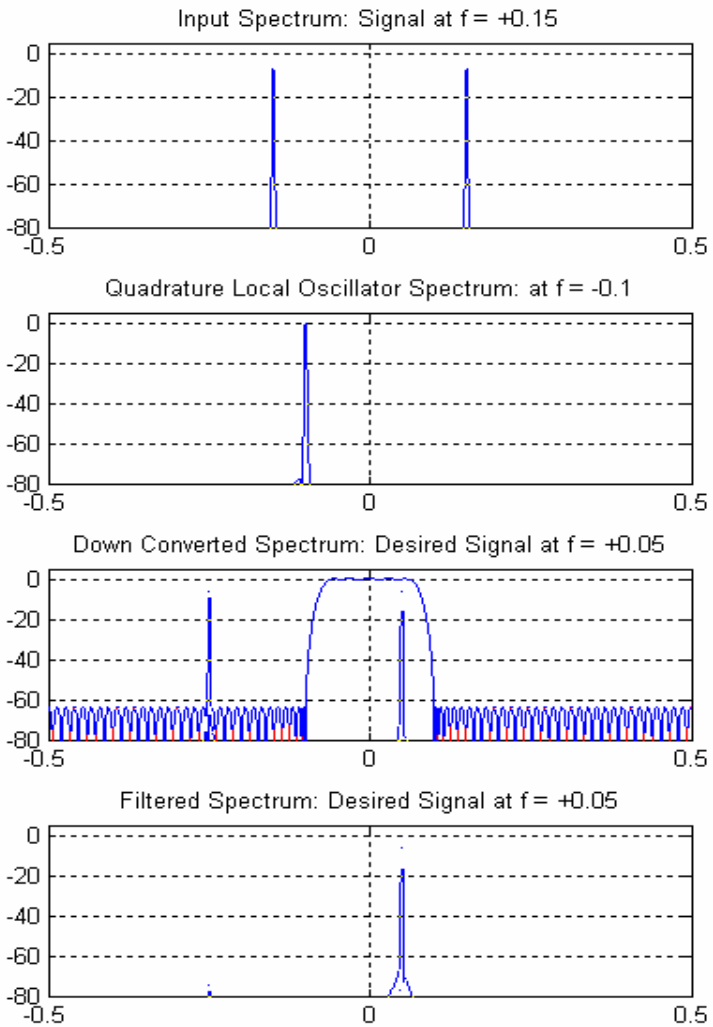

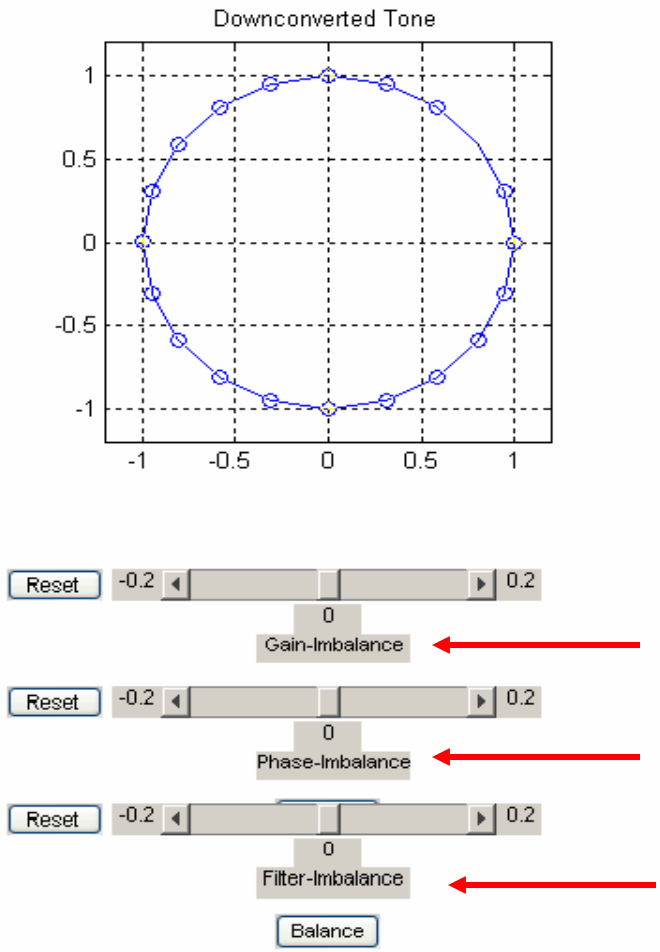

Gain Imbalance

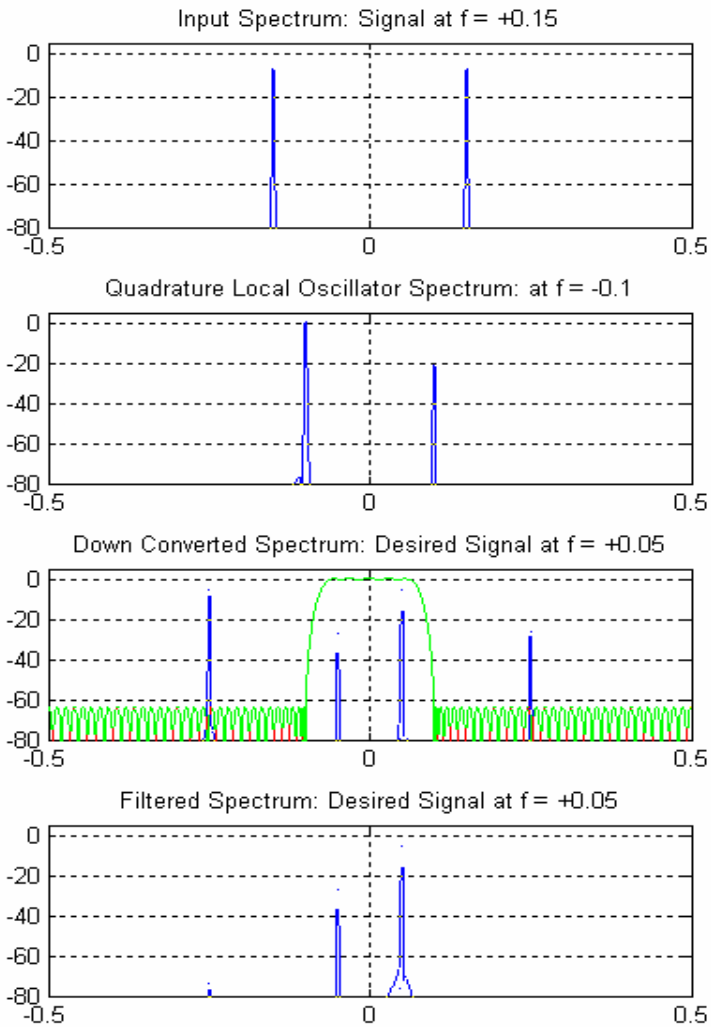

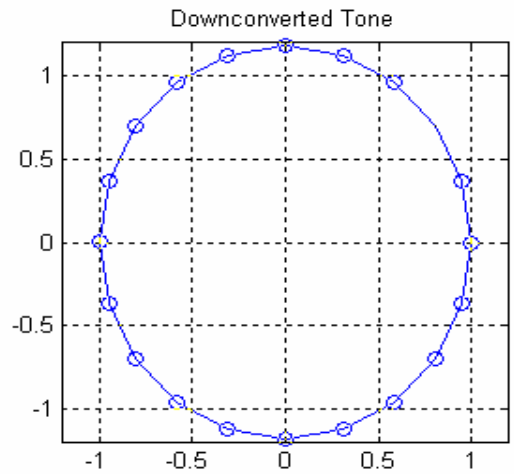

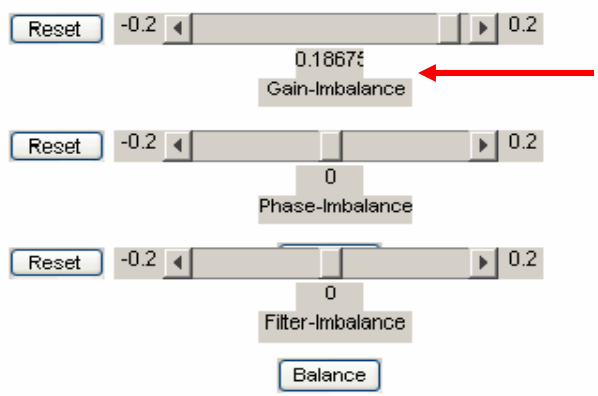

Phase Imbalance

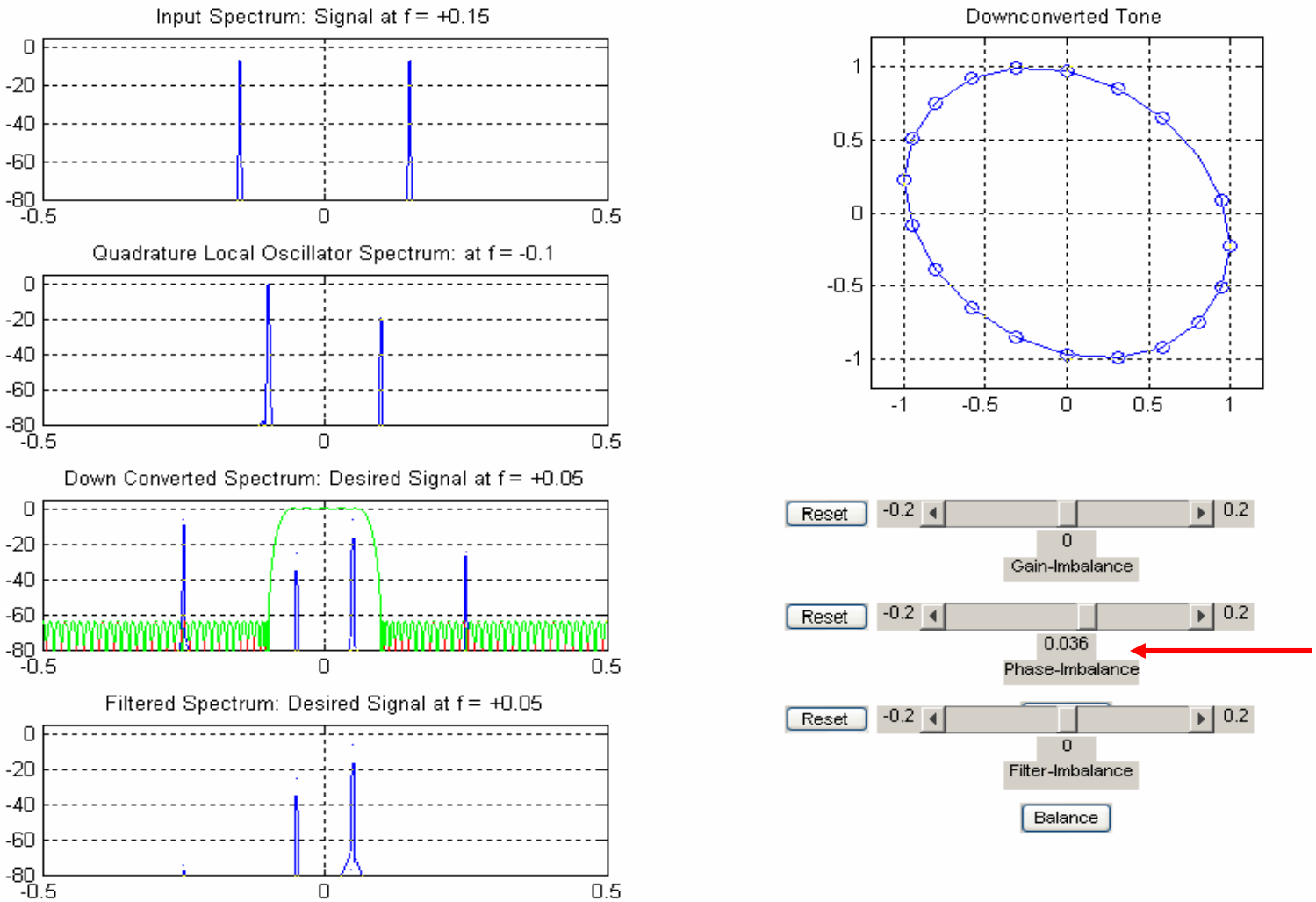

Gain and Phase Imbalance

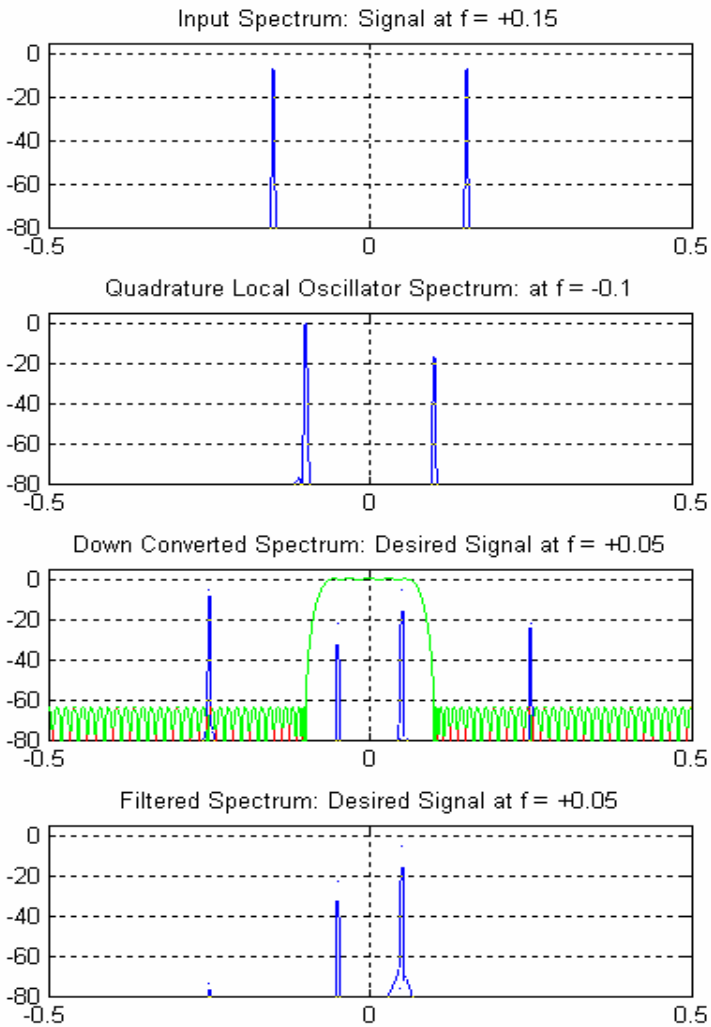

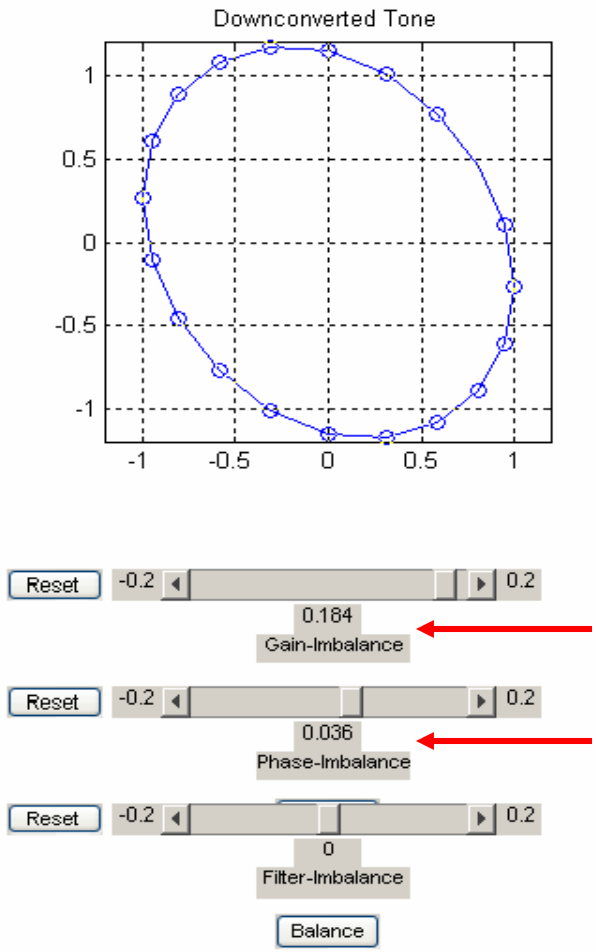

Filter Imbalance

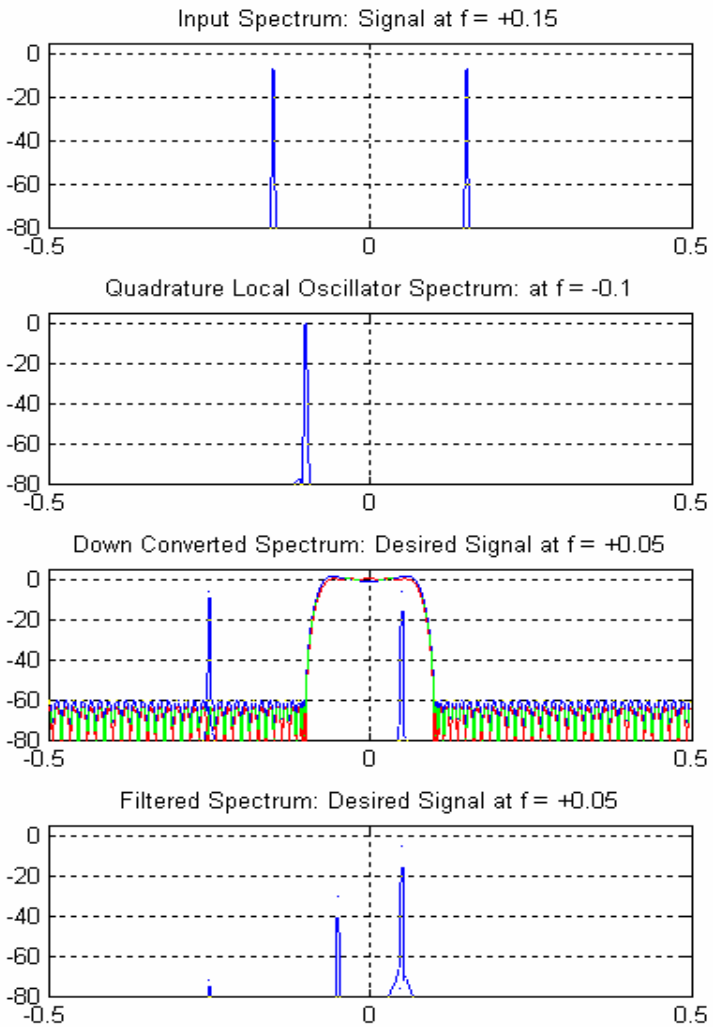

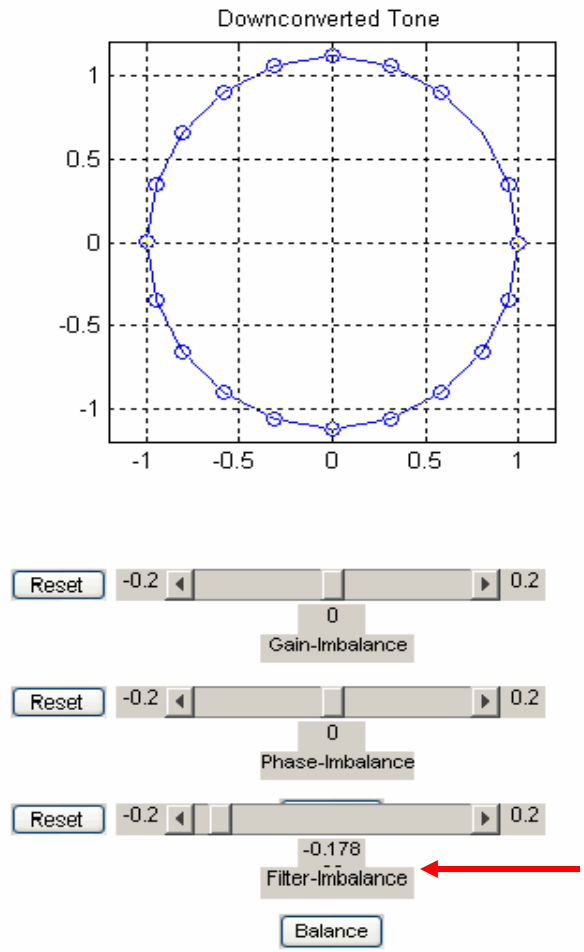

Effect of Gain Imbalance

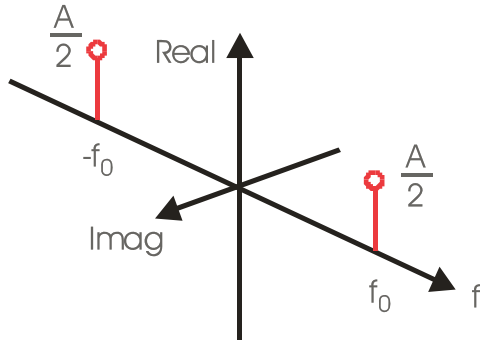

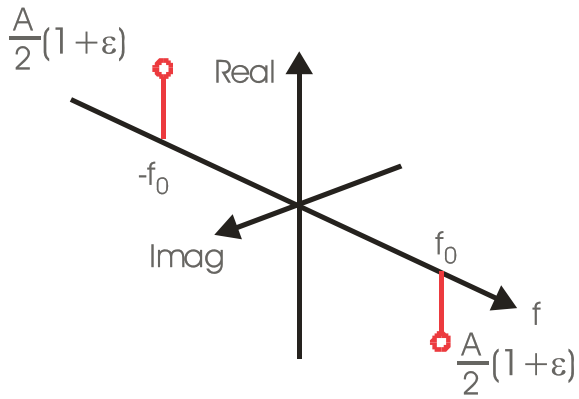

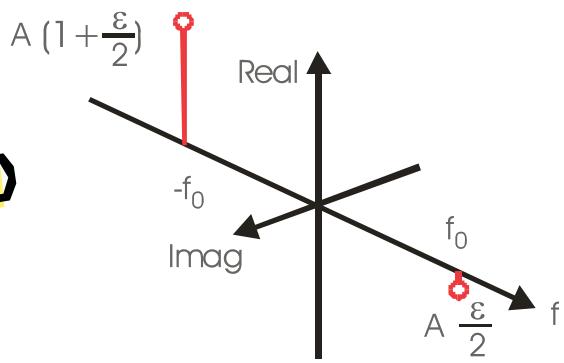

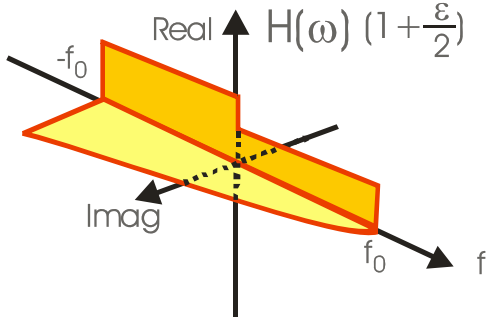

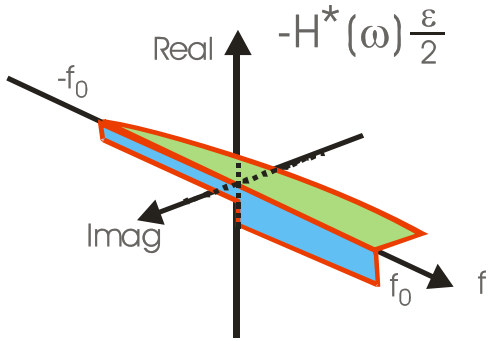

Image Spectra
Due to gain Imbalance

Effect of Phase Imbalance

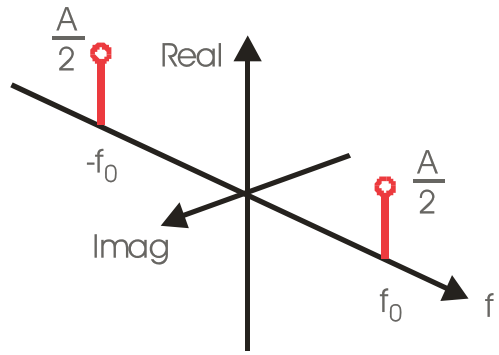

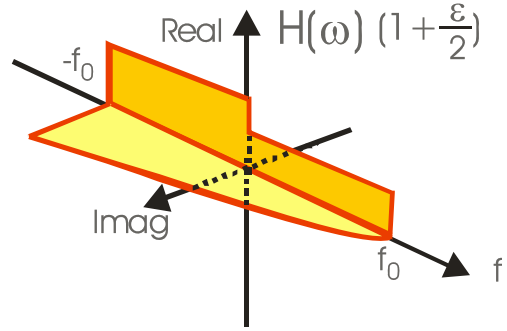

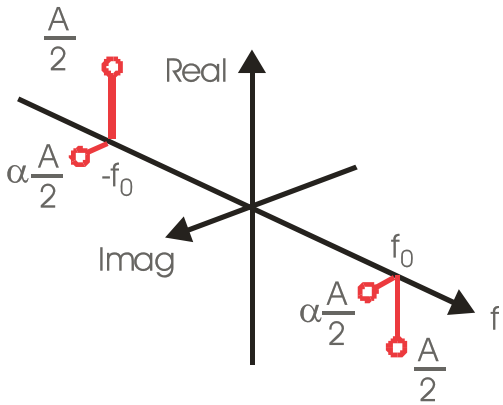

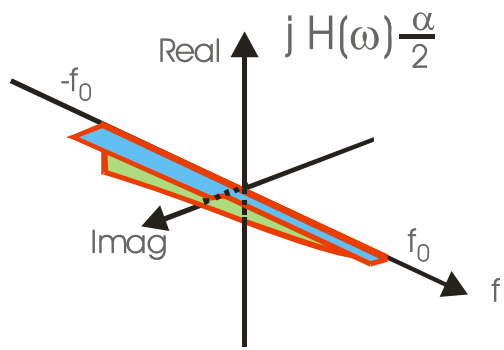

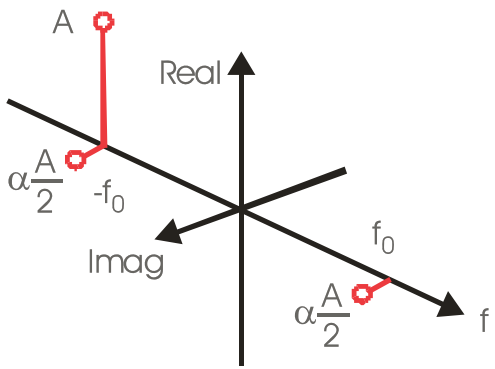

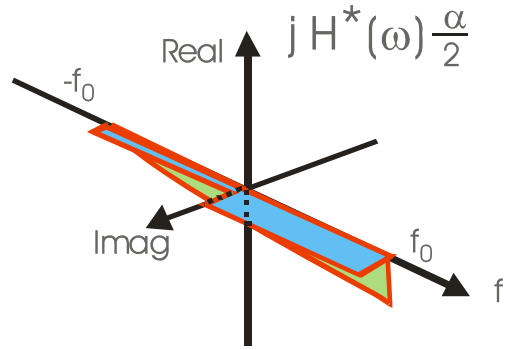

Image Spectra
Due to Phase Imbalance

Description and Model of Baseband Down Conversion

$$H'(\omega) = H(\omega) + 0.5(\varepsilon + j\alpha)H(\omega) - 0.5(\varepsilon - j\alpha)H^*(\omega)$$

$$(x' + jy) = (x + jy) + 0.5\,\varepsilon(x + jy) + j0.5\,\alpha(x + jy)$$
$$- 0.5\,\varepsilon(x - jy) + j0.5\,\alpha(x - jy)$$

$$(x' + jy) = x + j[y(1 + \varepsilon) + \alpha x]$$

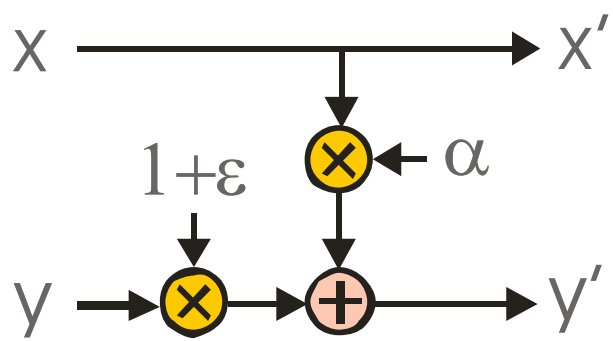

Effect of I-Q Imbalance on 16-QAM Constellation

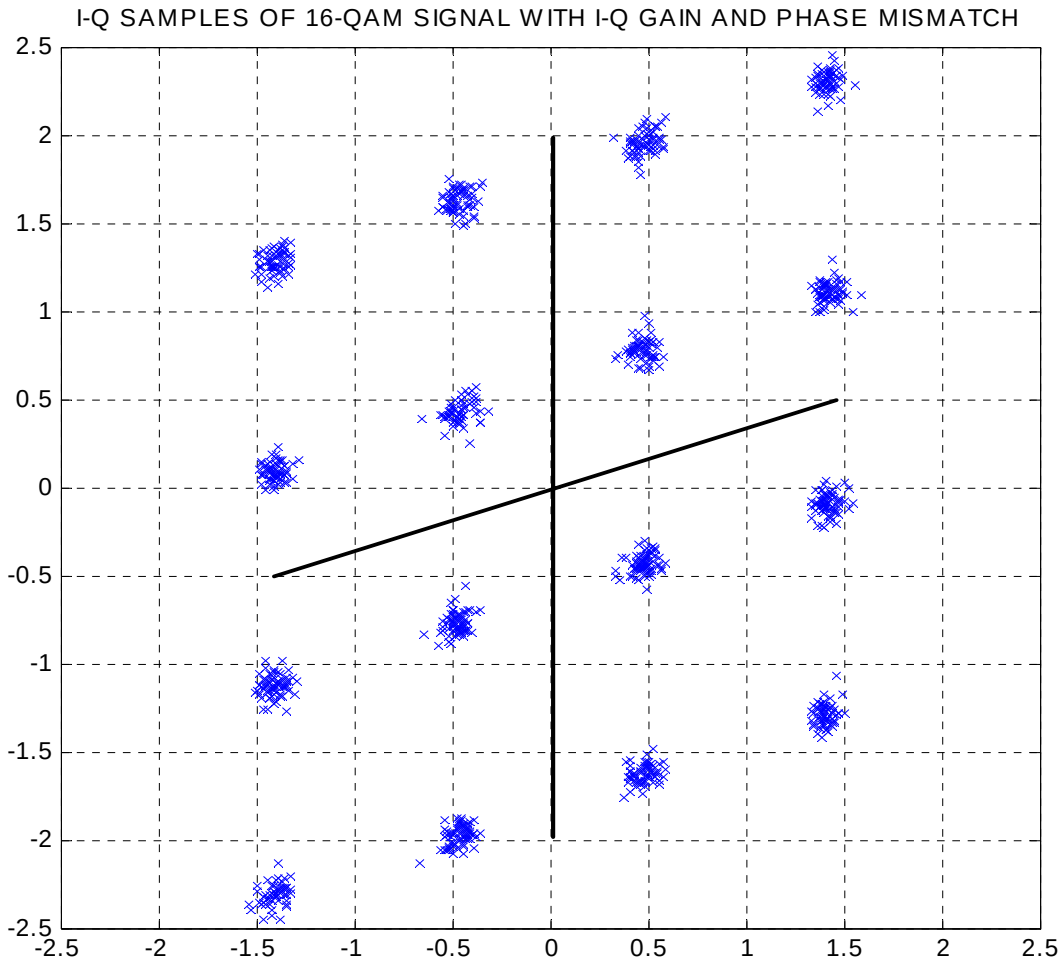

Input Signal Conditioning and Correction

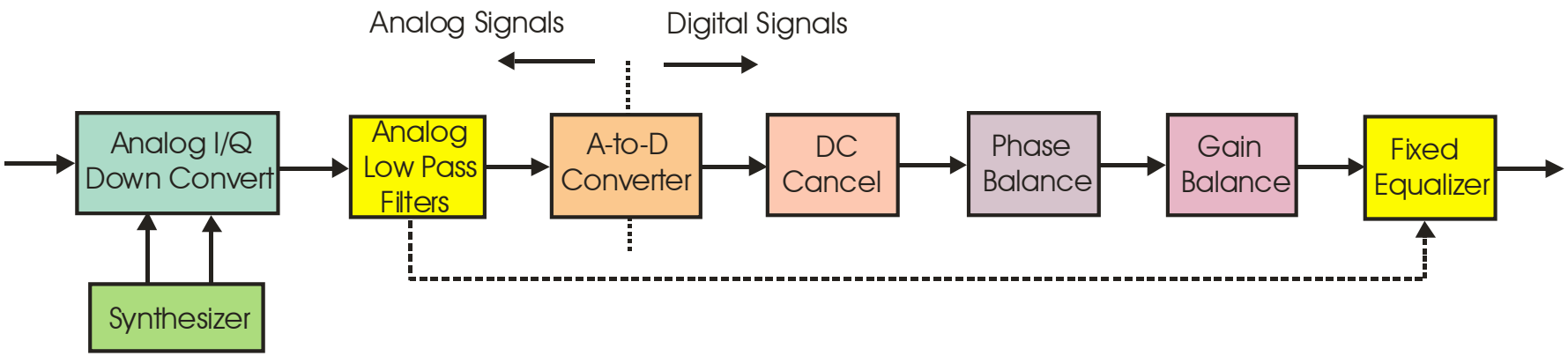

DC-Cancel and I-Q Imbalance Correction

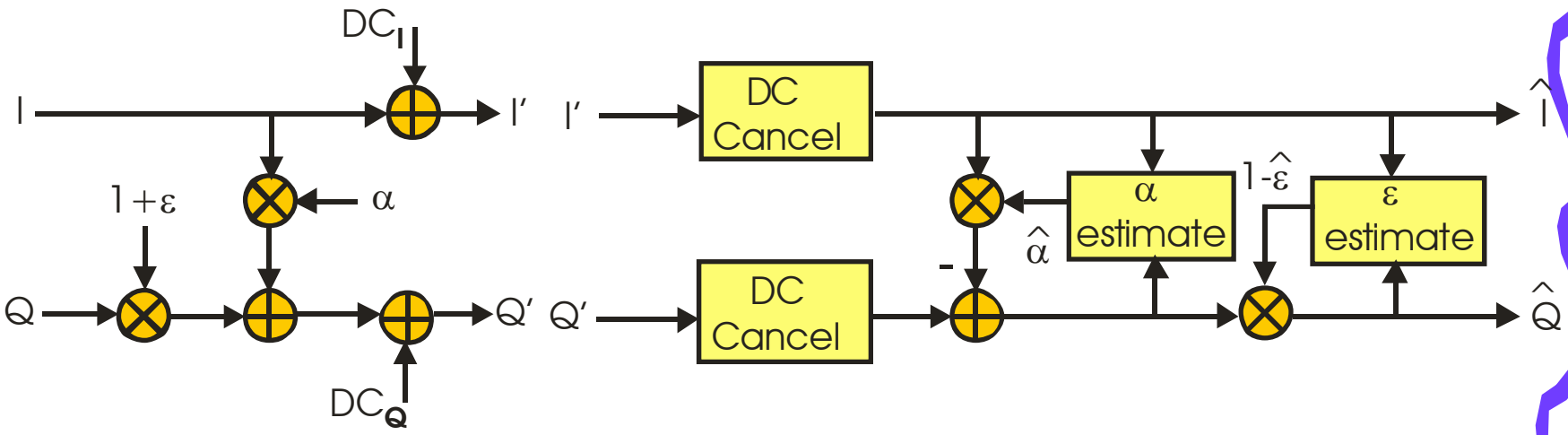

I-Q Imbalance Correction Algorithms

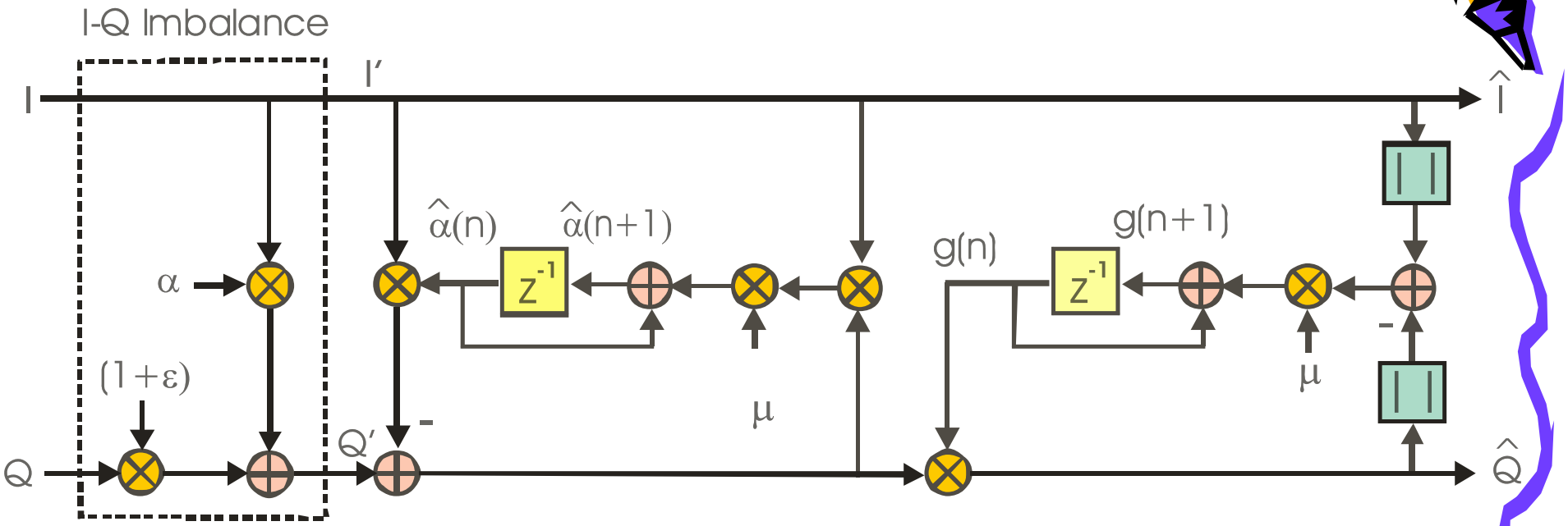

Gain and Phase Parameter Trajectories

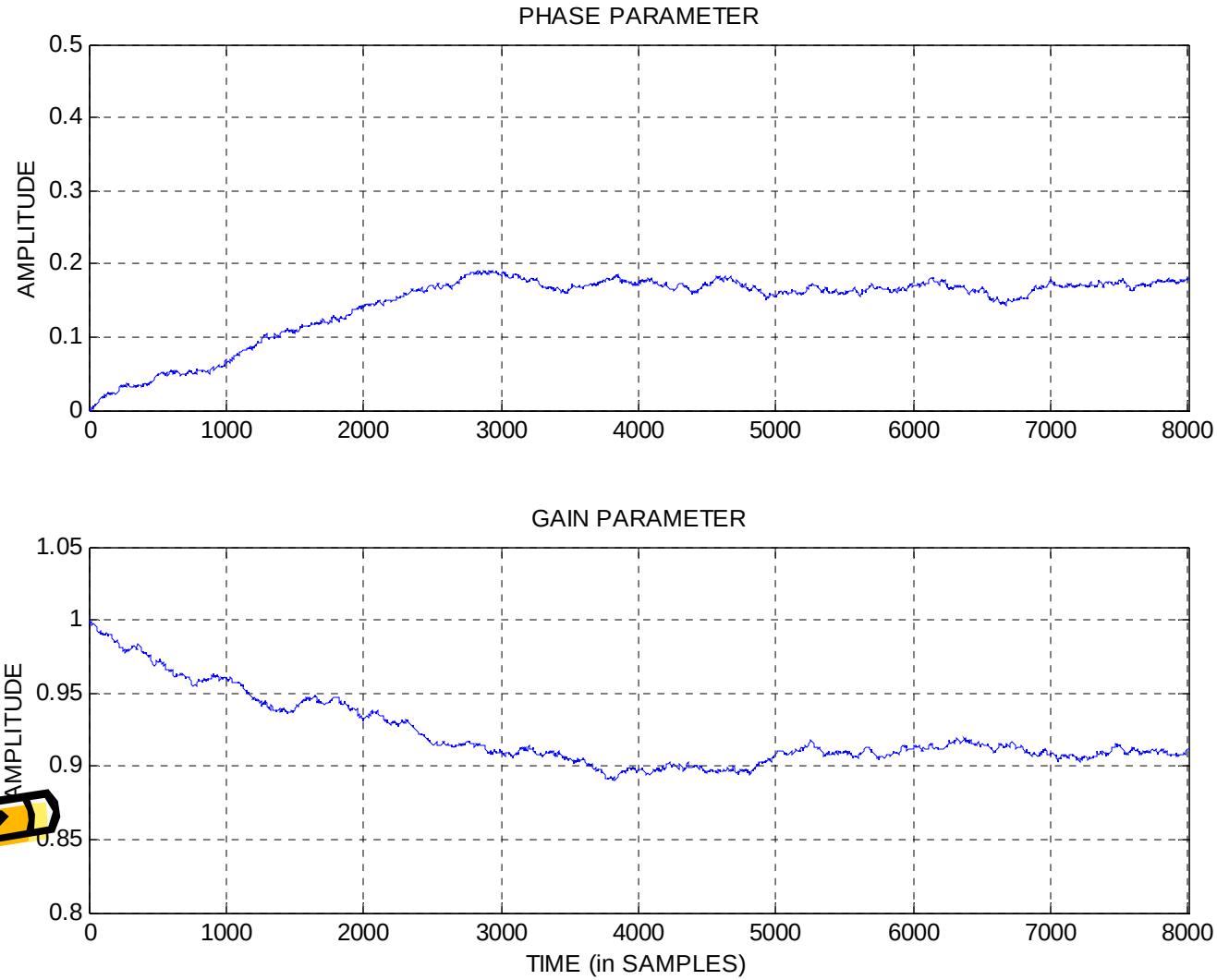

Constellation after Correcting Gain and Phase Imbalance

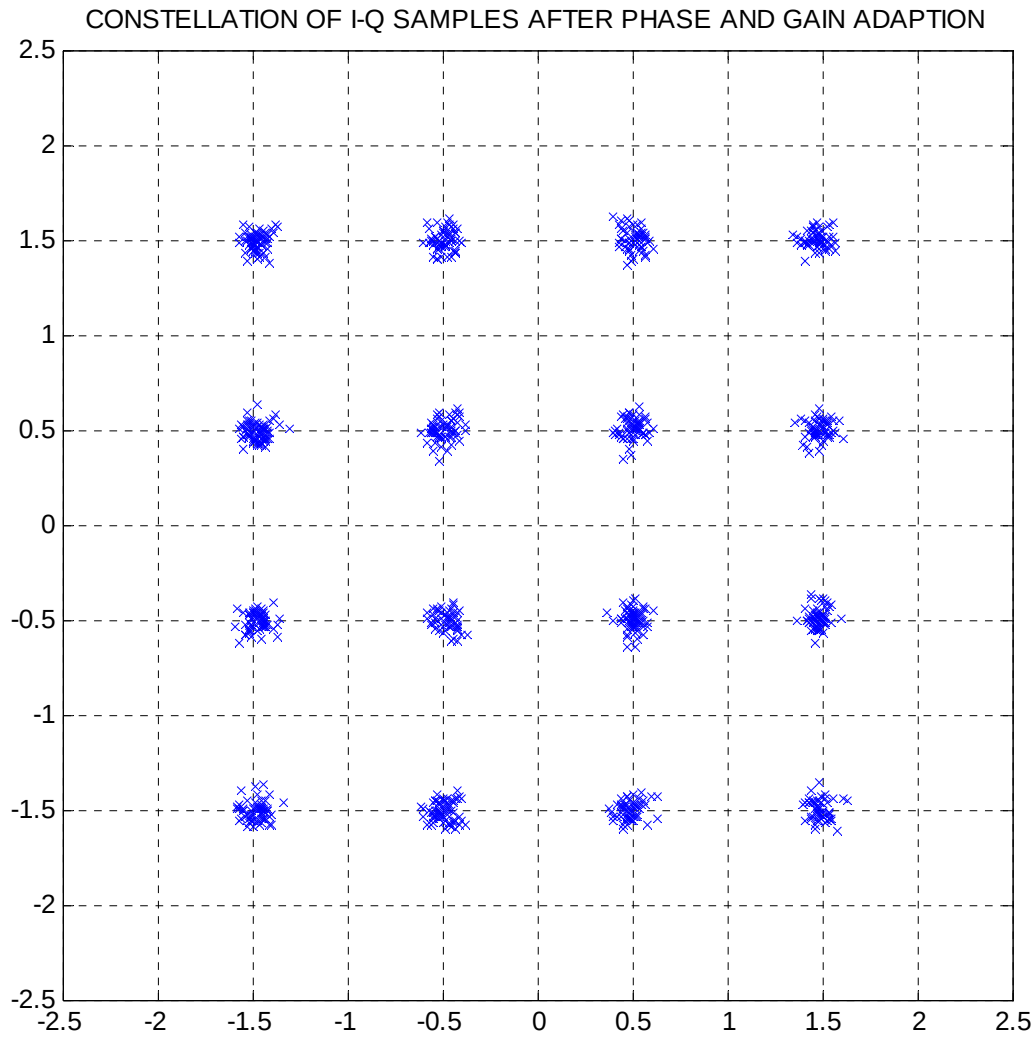

- That was the Easy part
- The Easy part is over
- Consider a channelizer!

Analog Block Conversion

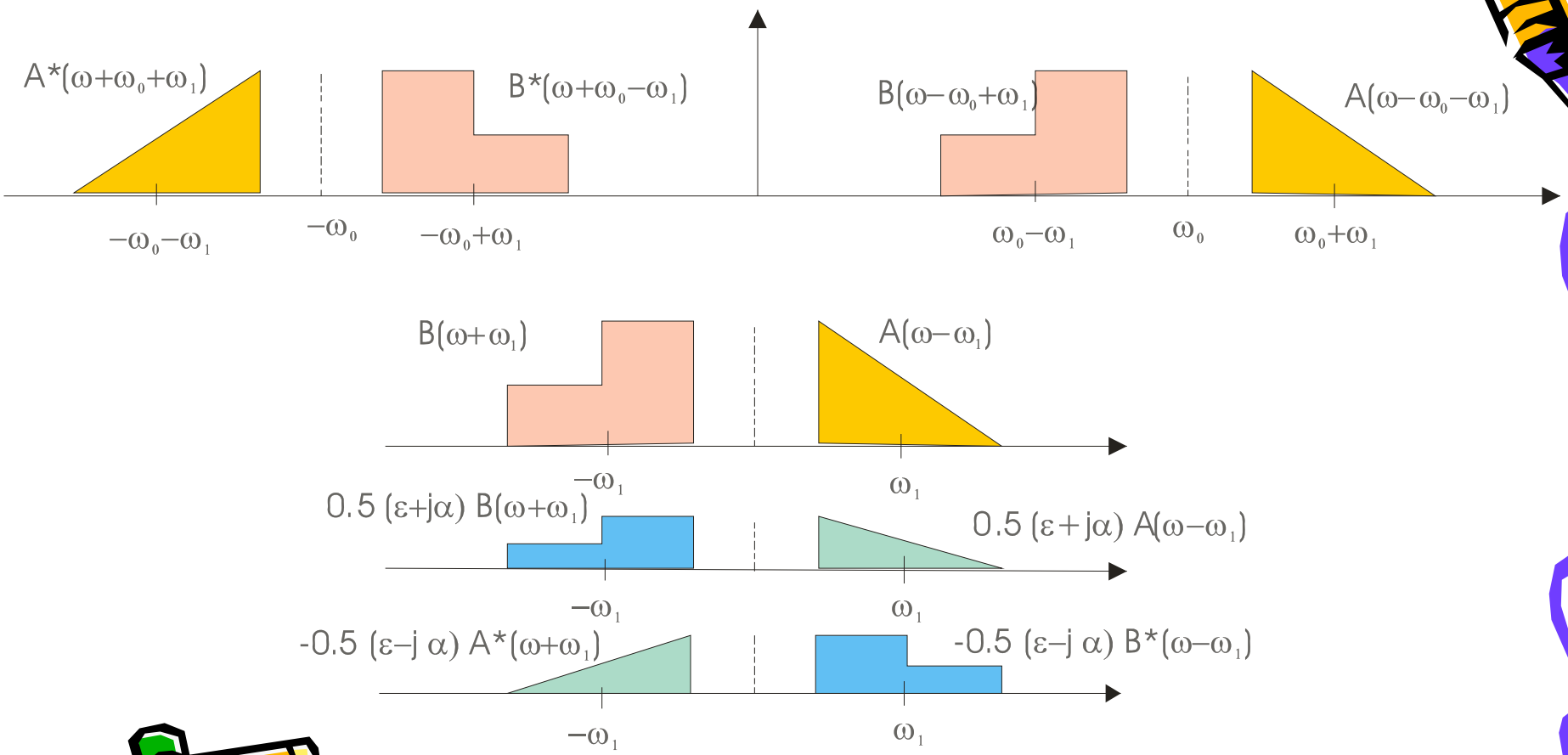

Digital Second Conversion

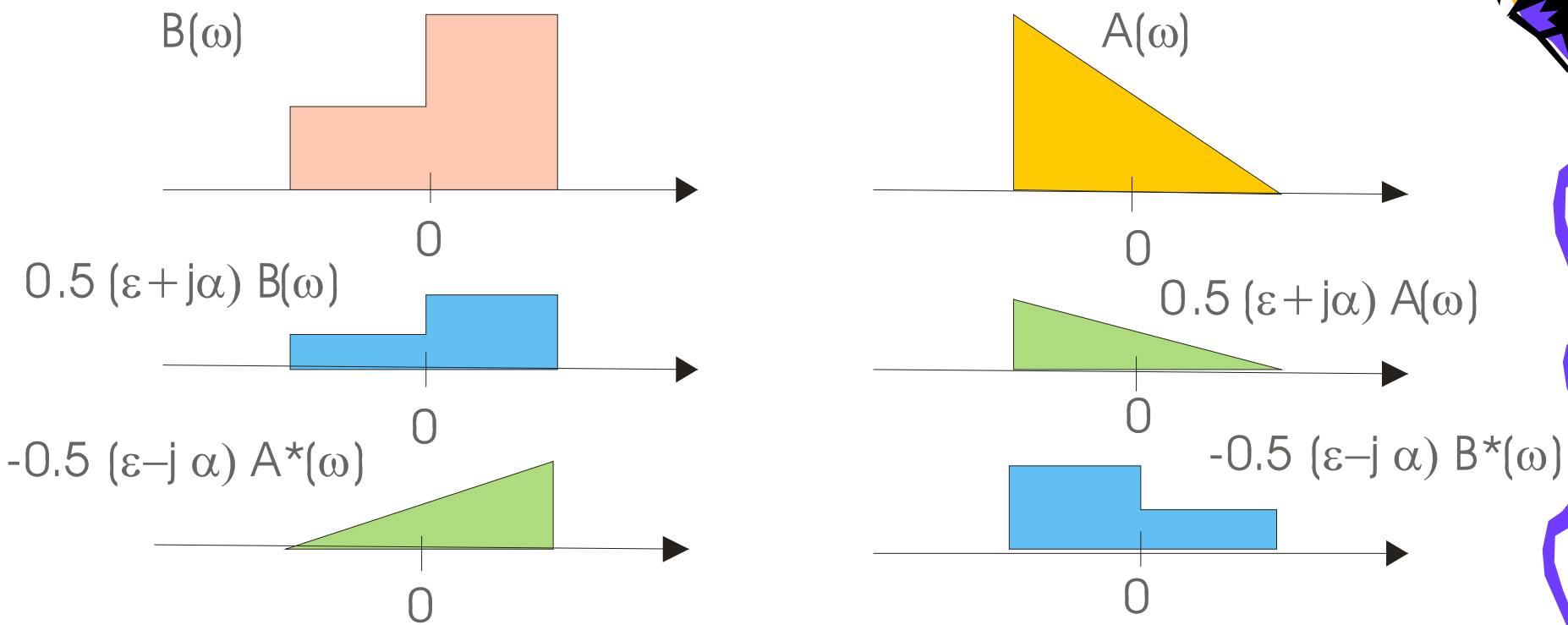

Description and Model of Block Down Conversion

$$A'(\omega) = A(\omega)+0.5(\varepsilon+j\alpha)A(\omega)-0.5(\varepsilon-j\alpha)B^*(\omega)$$

$$B'(\omega) = B(\omega)+0.5(\varepsilon+j\alpha)B(\omega)-0.5(\varepsilon-j\alpha)A^*(\omega)$$

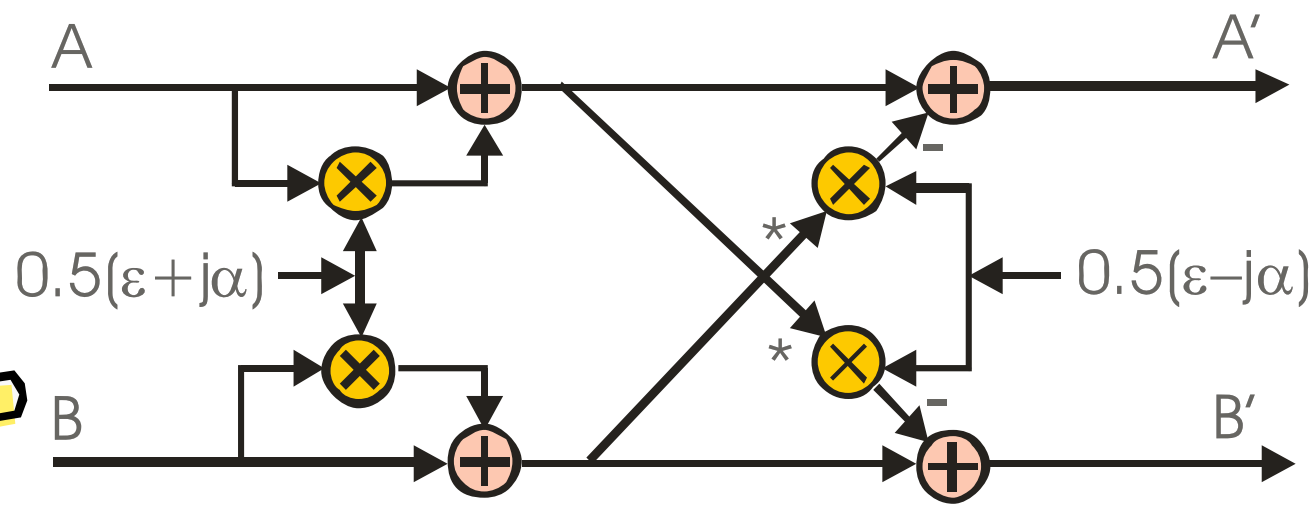

Constellations of channel +k and -k

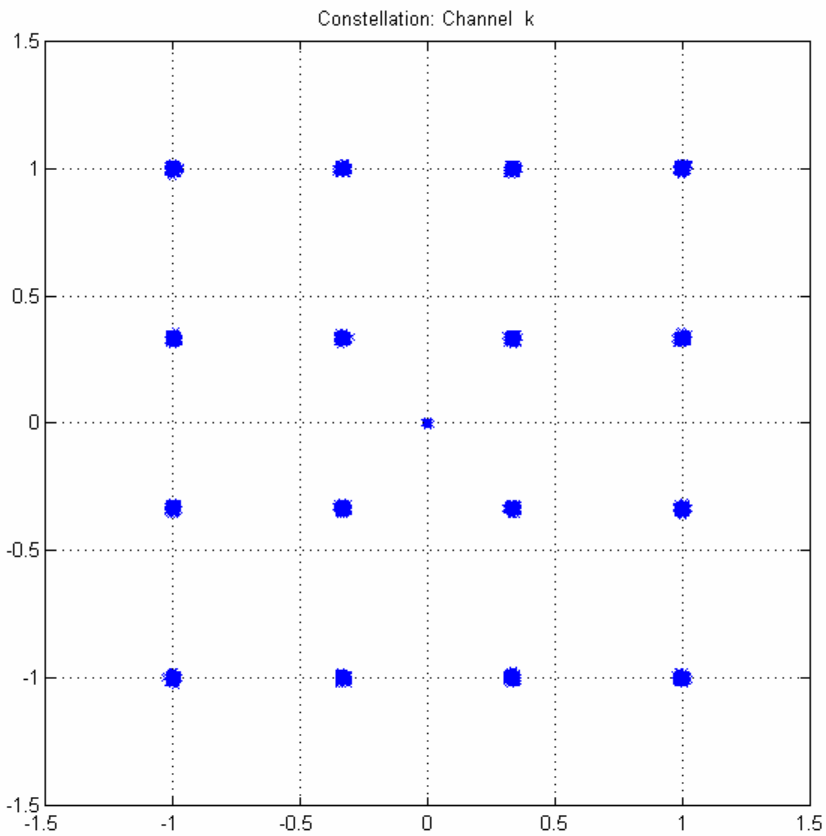

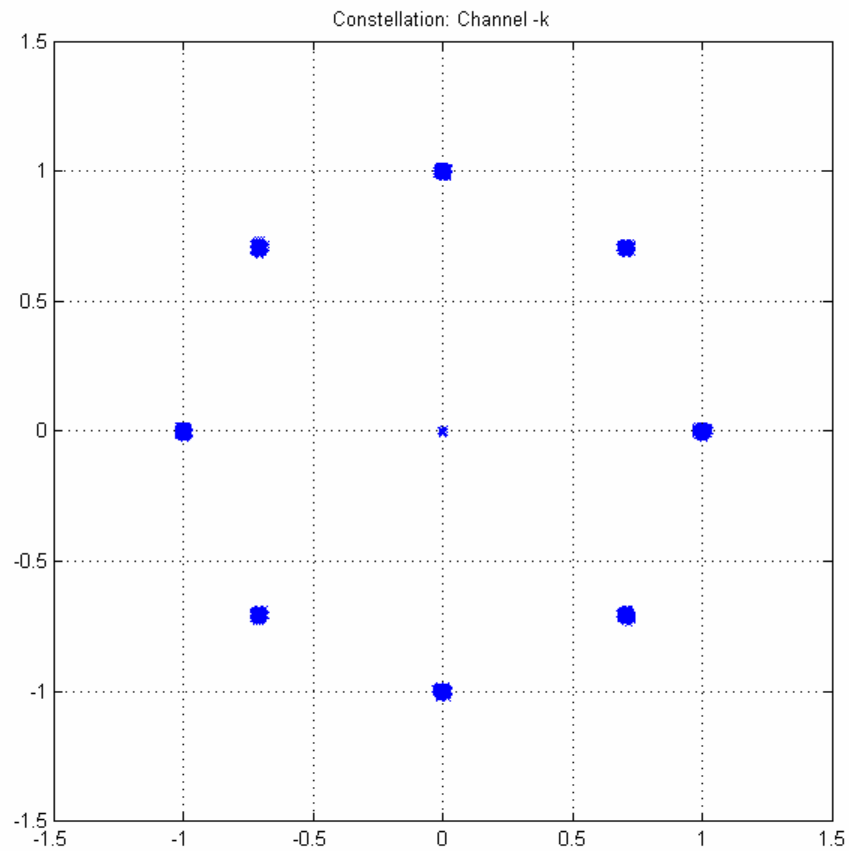

Crosstalk Between Channels k and –k Due to gain and Phase Imbalance

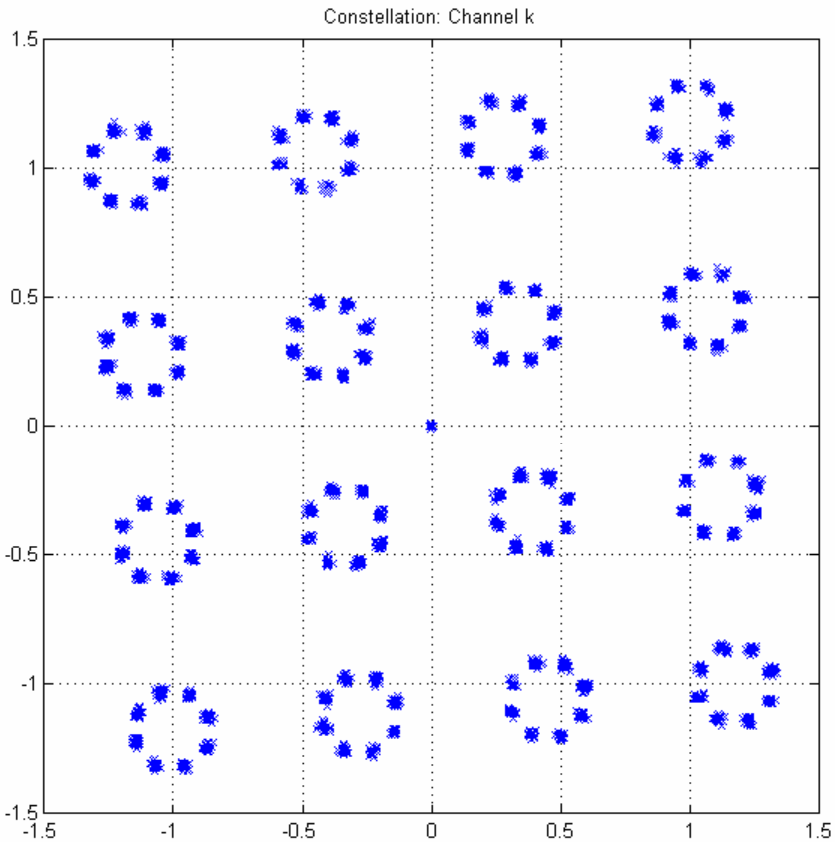

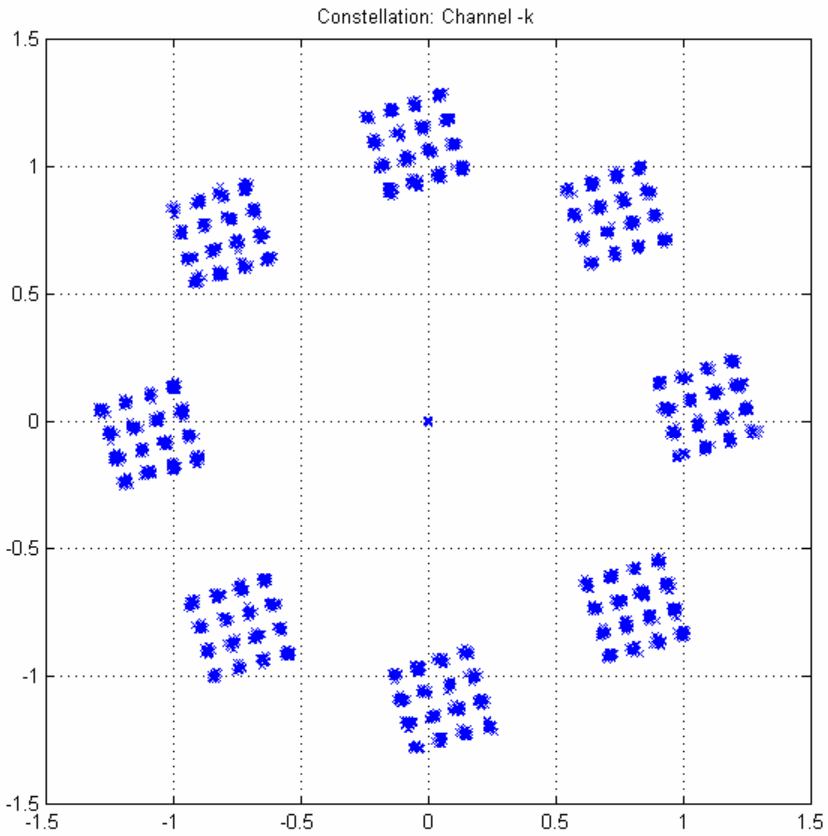

Constellation after Gradient Descent Correction of Gain and Phase Imbalance

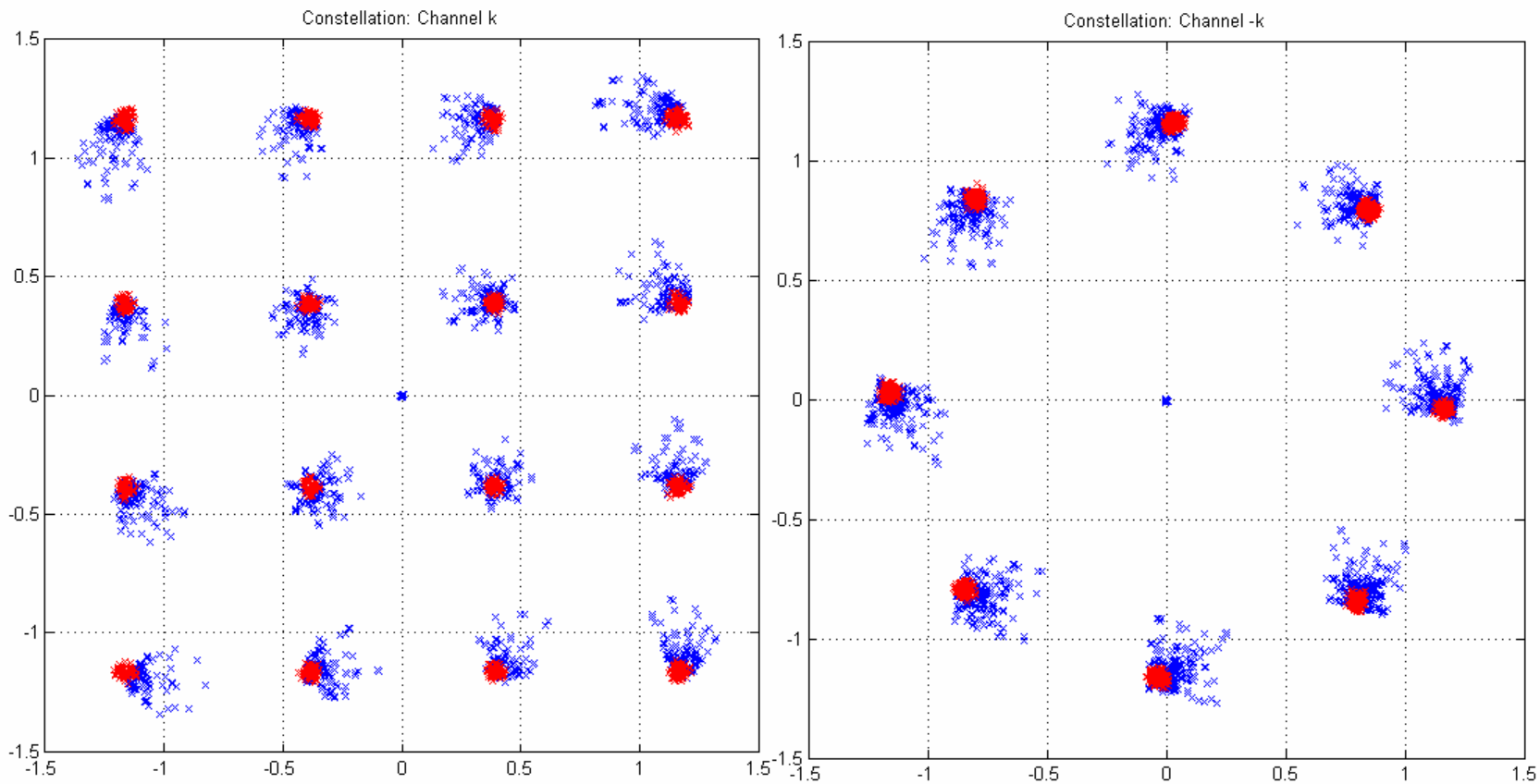

Crosstalk Between Channels k and Empty Channel-k

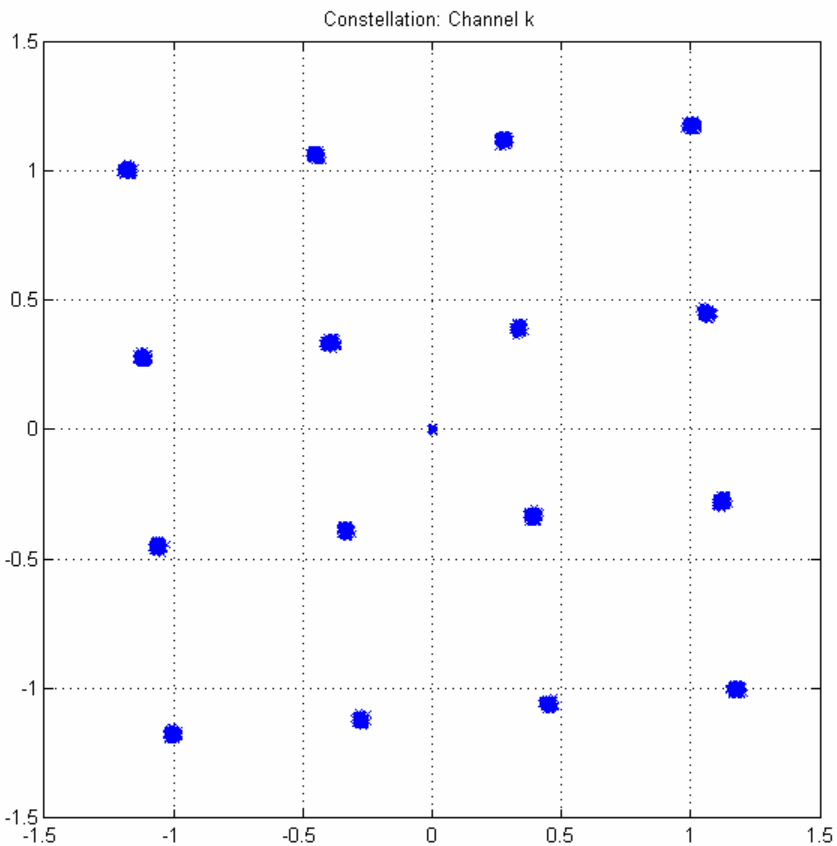

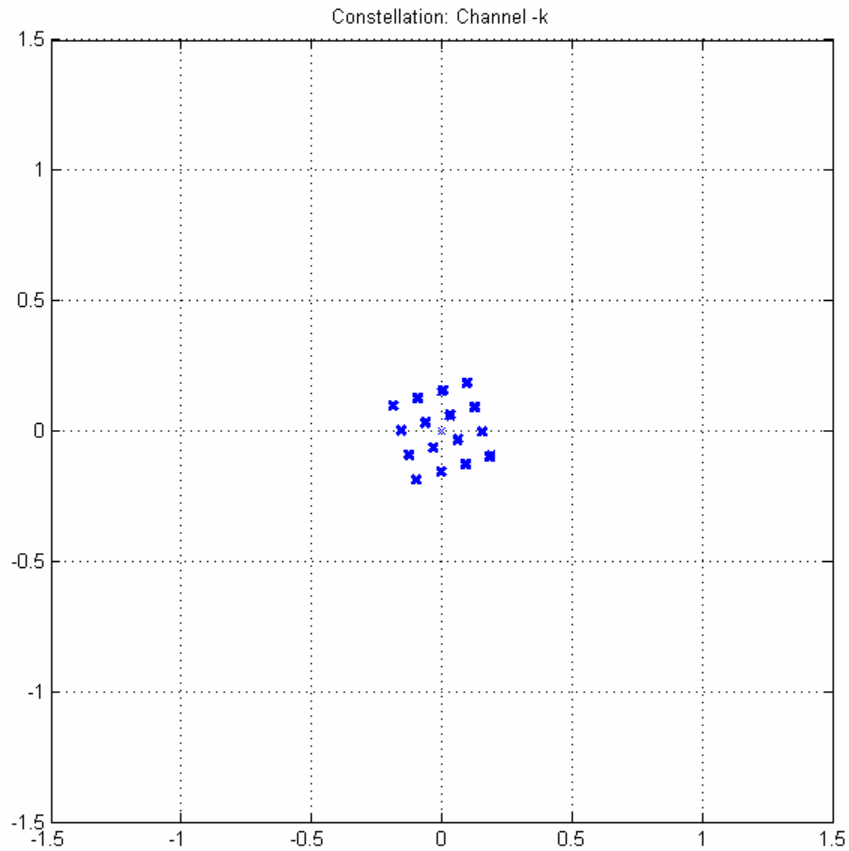

Constellation after Gradient Descent Correction of Gain and Phase Imbalance

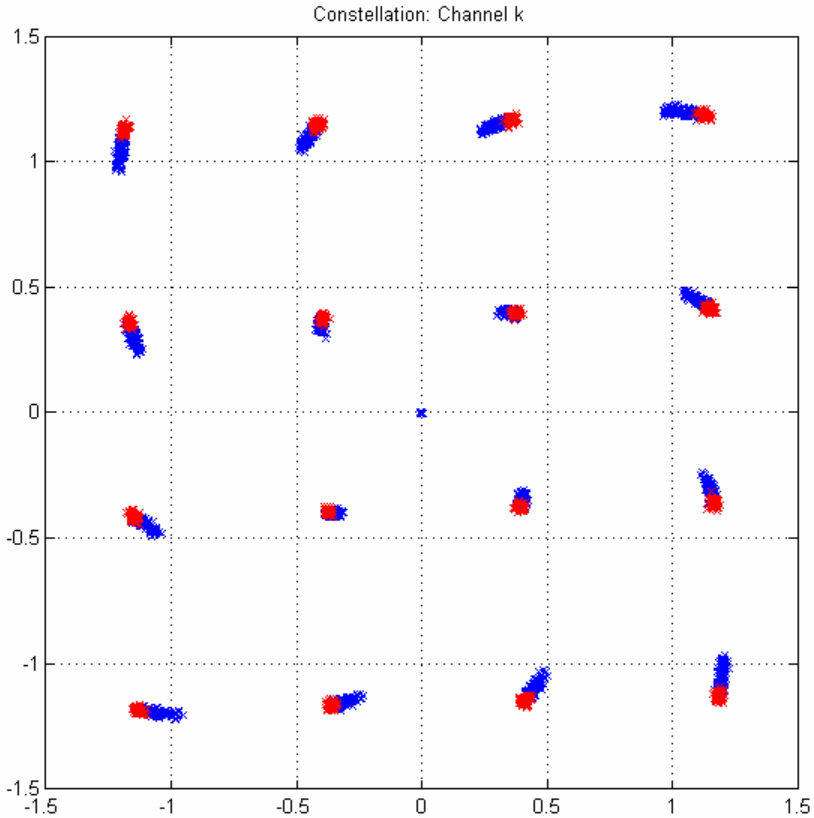

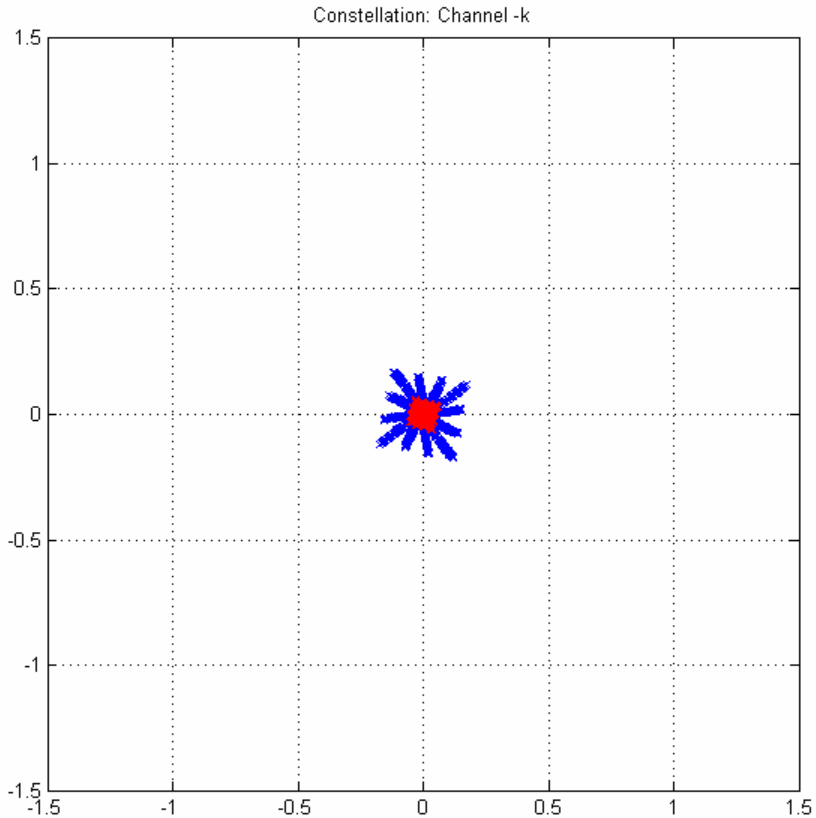

Estimating Correcting Gain Terms

$$A' = A + 0.5(\varepsilon + j\alpha)\, A - 0.5(\varepsilon - j\alpha)\, B^*$$

$$B' = B + 0.5(\varepsilon + j\alpha)\, B - 0.5(\varepsilon - j\alpha)\, A^*$$

$$A'B' = -0.5\,(\varepsilon - j\alpha)\, AA^* - 0.5(\varepsilon - j\alpha)\, BB^* + AB + AB\left(O(\varepsilon^2, \alpha^2)\right)$$

$$A'B' = -0.5(\varepsilon - j\alpha)(AA' + BB')$$

$$(\varepsilon - j\alpha) \cong -2\,\frac{A'B'}{(AA^* + BB^*)} \cong \frac{A'B'}{(A'A'^* + B'B'^*)}$$

The Plot Thickens

Analog Block Down Conversion
With a Frequency Offset
Removed by Digital
Down Conversion

Analog Block Conversion with Frequency Offset

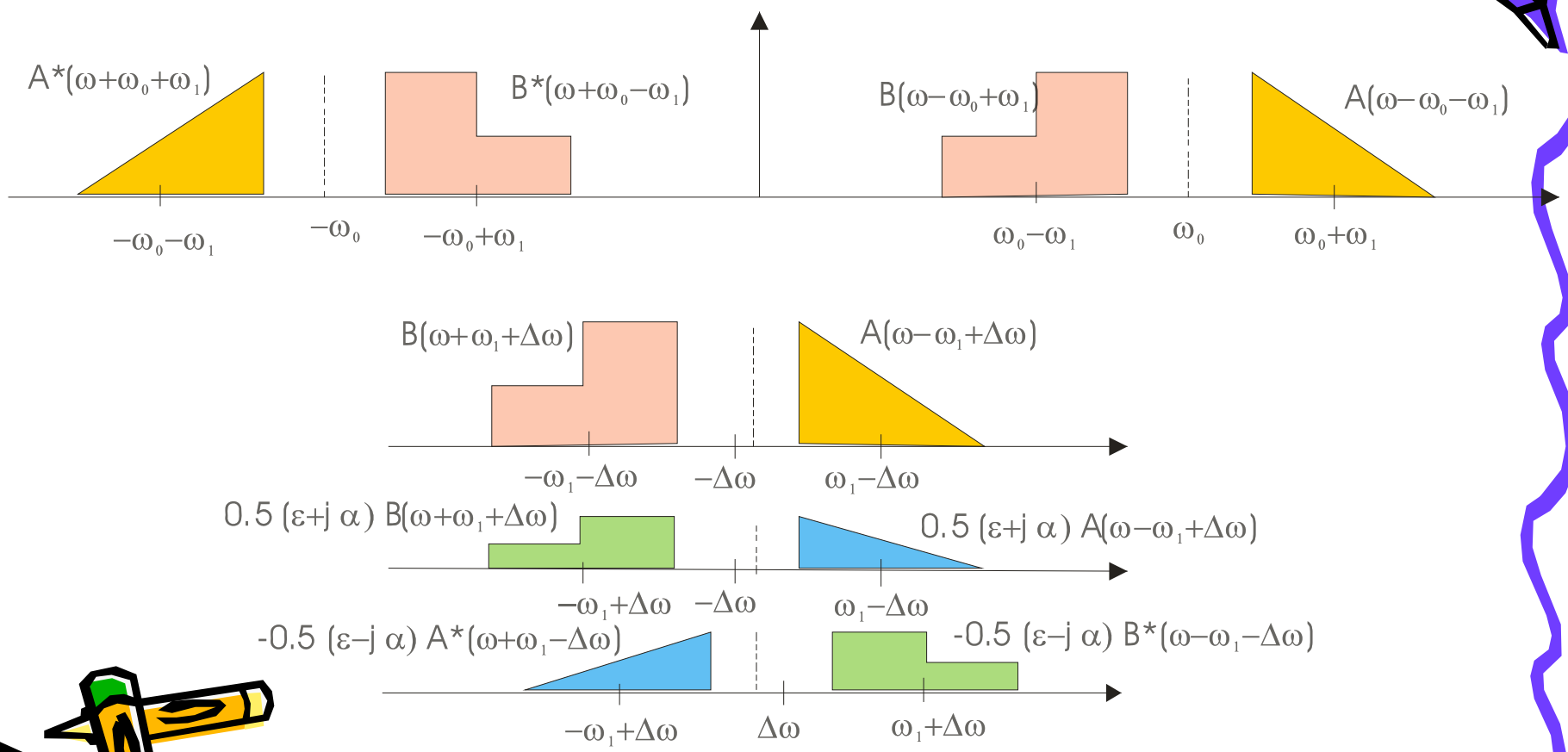

Digital Down Conversion and Removal of Frequency Offset

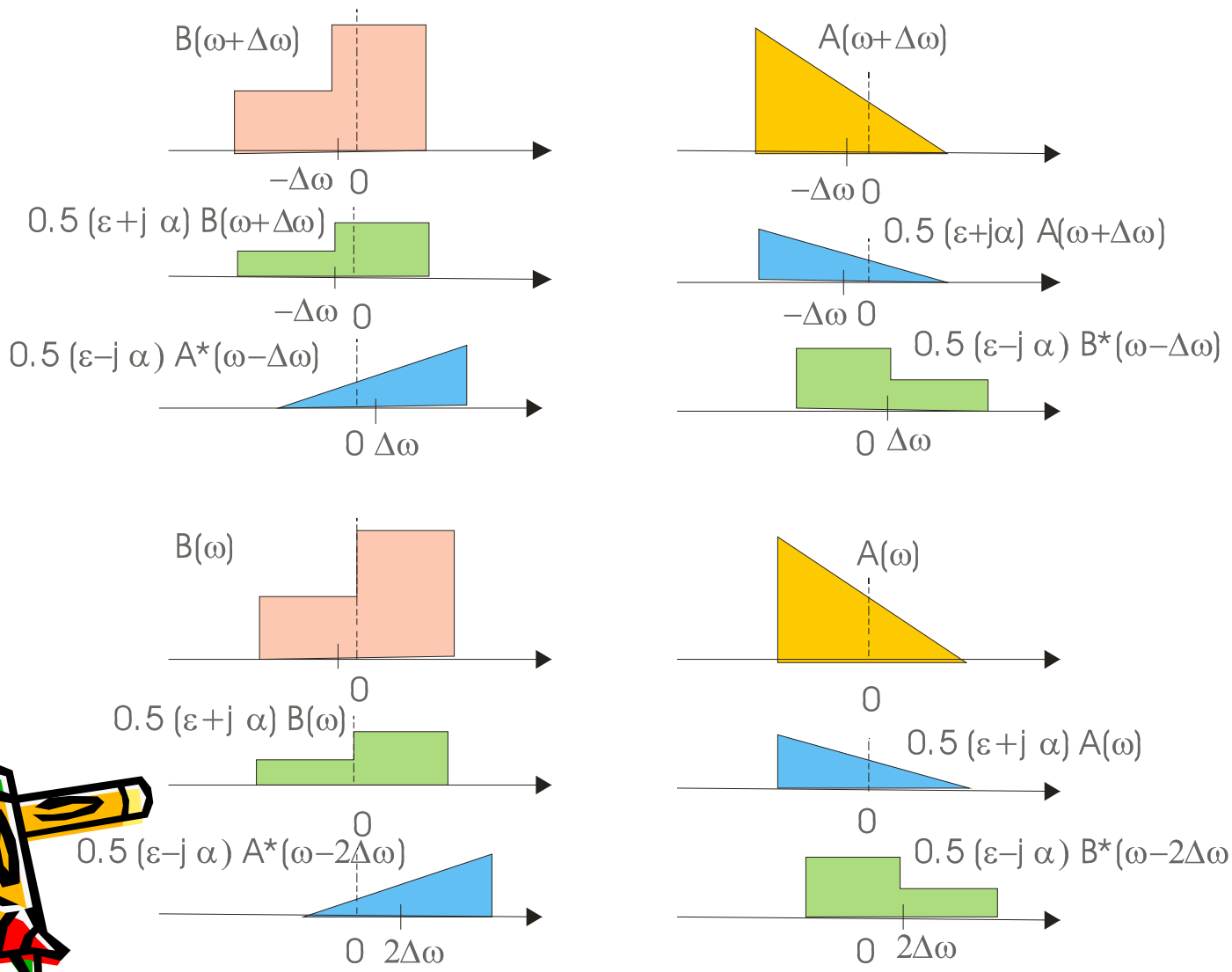

Description of Model and Block Down Conversion With frequency Offset

$$A'(\omega) = A(\omega)+0.5(\varepsilon+j\alpha)A(\omega)-0.5(\varepsilon-j\alpha)B^*(\omega-2\Delta\omega)$$

$$B'(\omega) = B(\omega)+0.5(\varepsilon+j\alpha)B(\omega)-0.5(\varepsilon-j\alpha)A^*(\omega-2\Delta\omega)$$

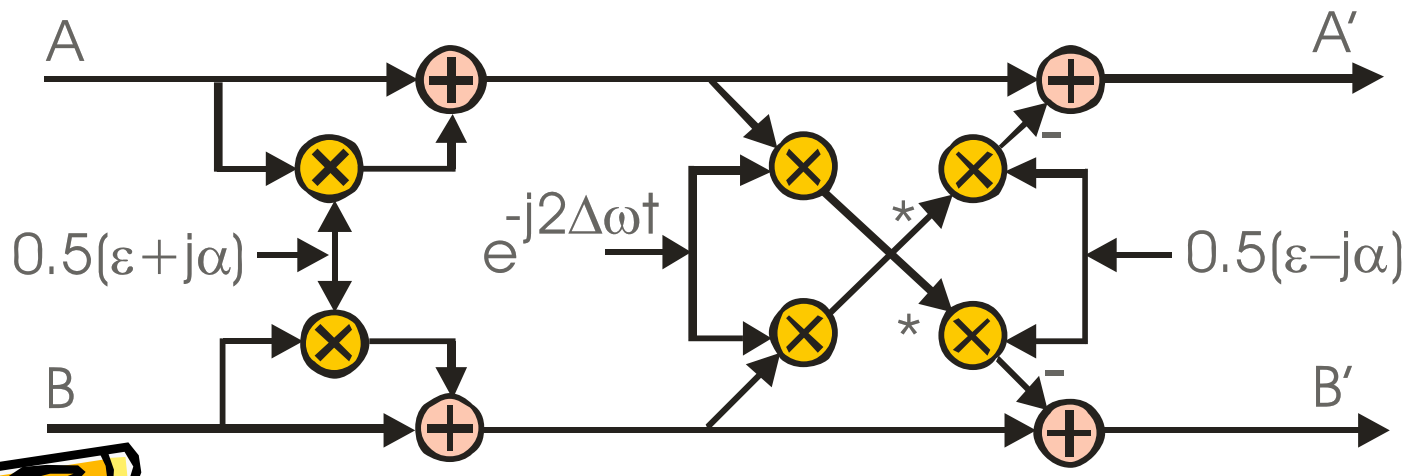

Estimating Correcting Gain Terms with Frequency Offset

$$A' = A + 0.5(\varepsilon + j\alpha)\,A - 0.5(\varepsilon - j\alpha)\,e \qquad B^*$$

$$B' = B + 0.5(\varepsilon + j\alpha)\,B - 0.5(\varepsilon - j\alpha)\,e^{j2\Delta\omega t}\,A^*$$

$$A'B'e^{-j2\Delta\omega t} = -0.5\,(\varepsilon - j\alpha)\,AA^* - 0.5(\varepsilon - j\alpha)\,BB^* + AB + AB\left(O(\varepsilon^2, \alpha^2)\right)$$

$$A'B'e^{-j2\Delta\omega t} = -0.5(\varepsilon - j\alpha)(AA' + BB')$$

$$(\varepsilon - j\alpha) \cong -2\,\frac{A'B'e^{-j2\Delta\omega t}}{(AA^* + BB^*)} \cong \frac{A'B'e^{-j2\Delta\omega t}}{(A'A'^* + B'B'^*)}$$

Constellations with I-Q Imbalance with and without Frequency Offset

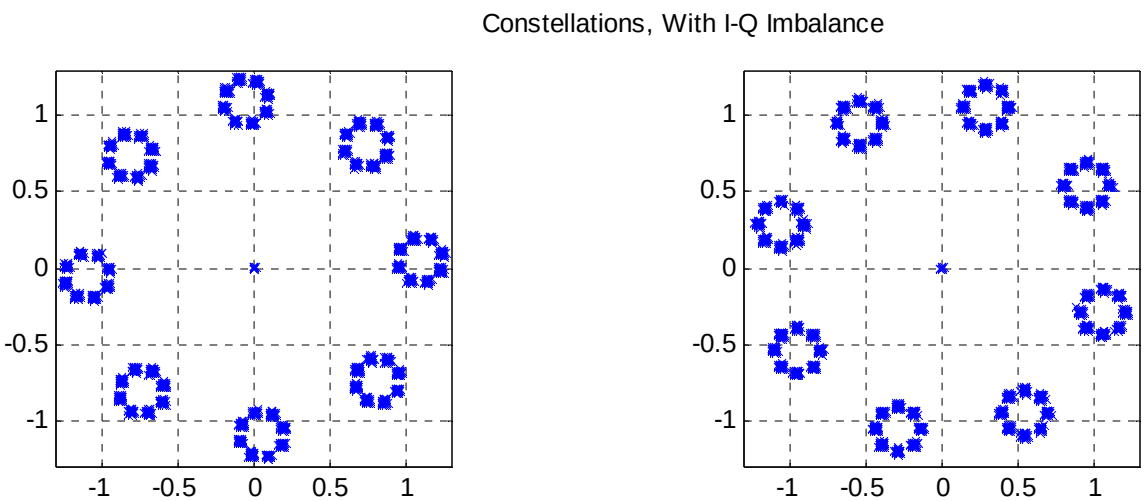

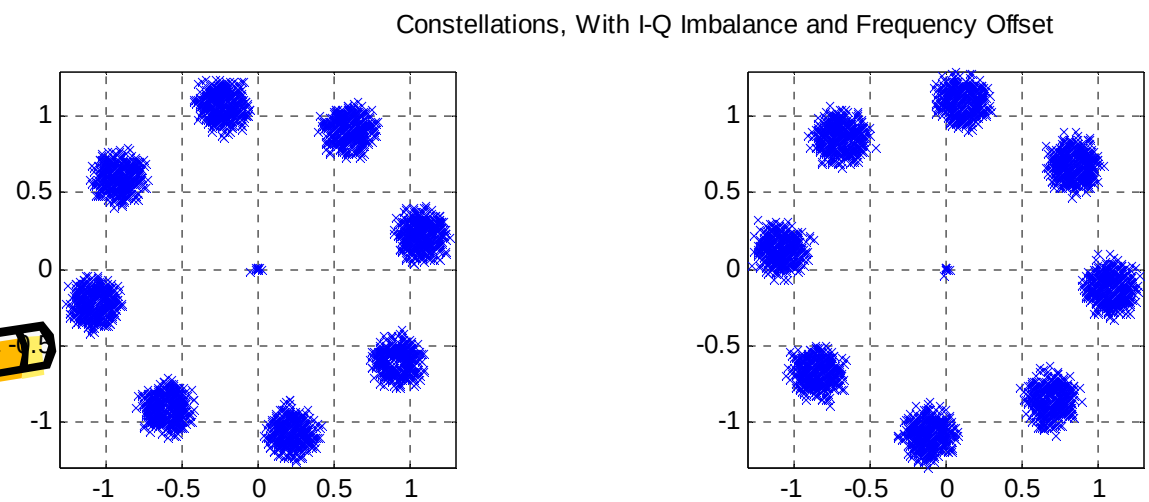

Constellation Trajectories During Adaptive Convergence

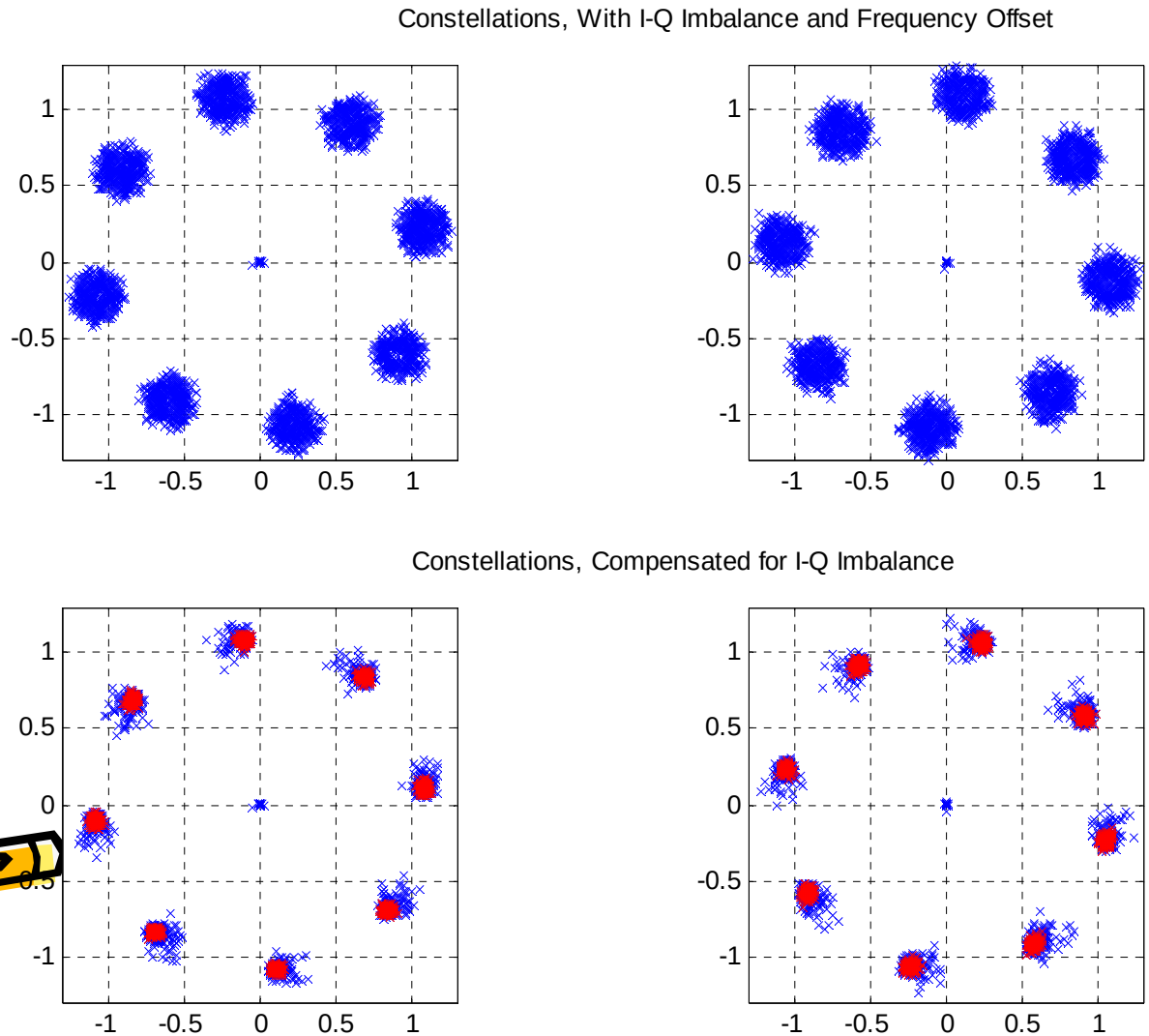

Processing Task

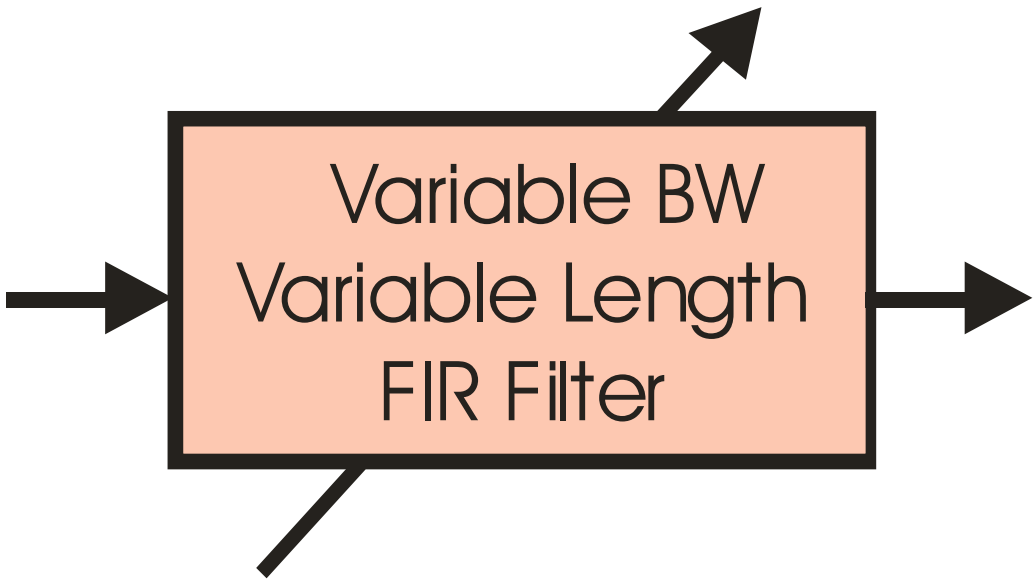

Narrower Bandwidth Filters Have Narrower Transition Bandwidths Hence Are Longer Filters

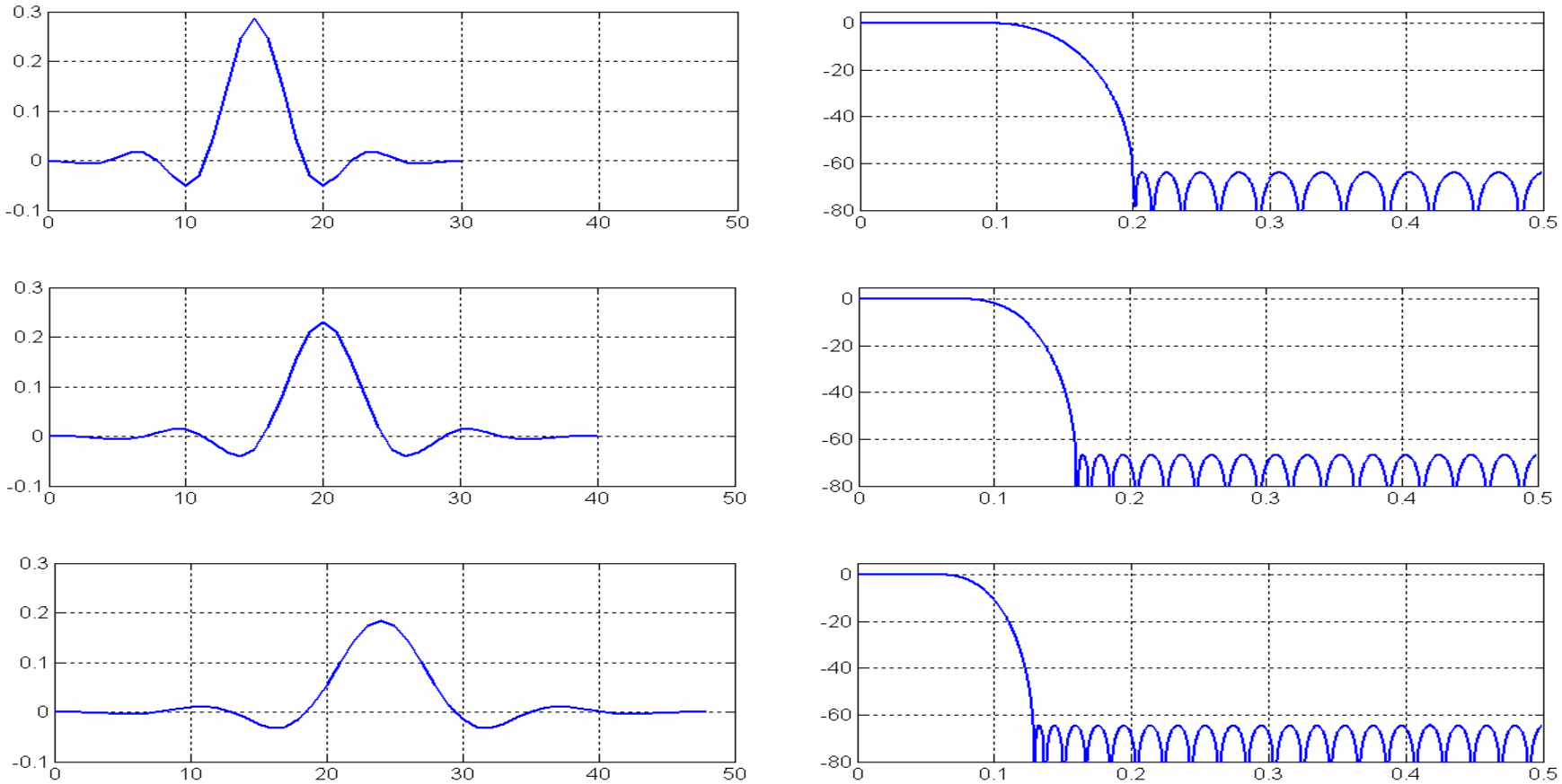

Spectrum and Group Delay
IIR Filter and Equalizer

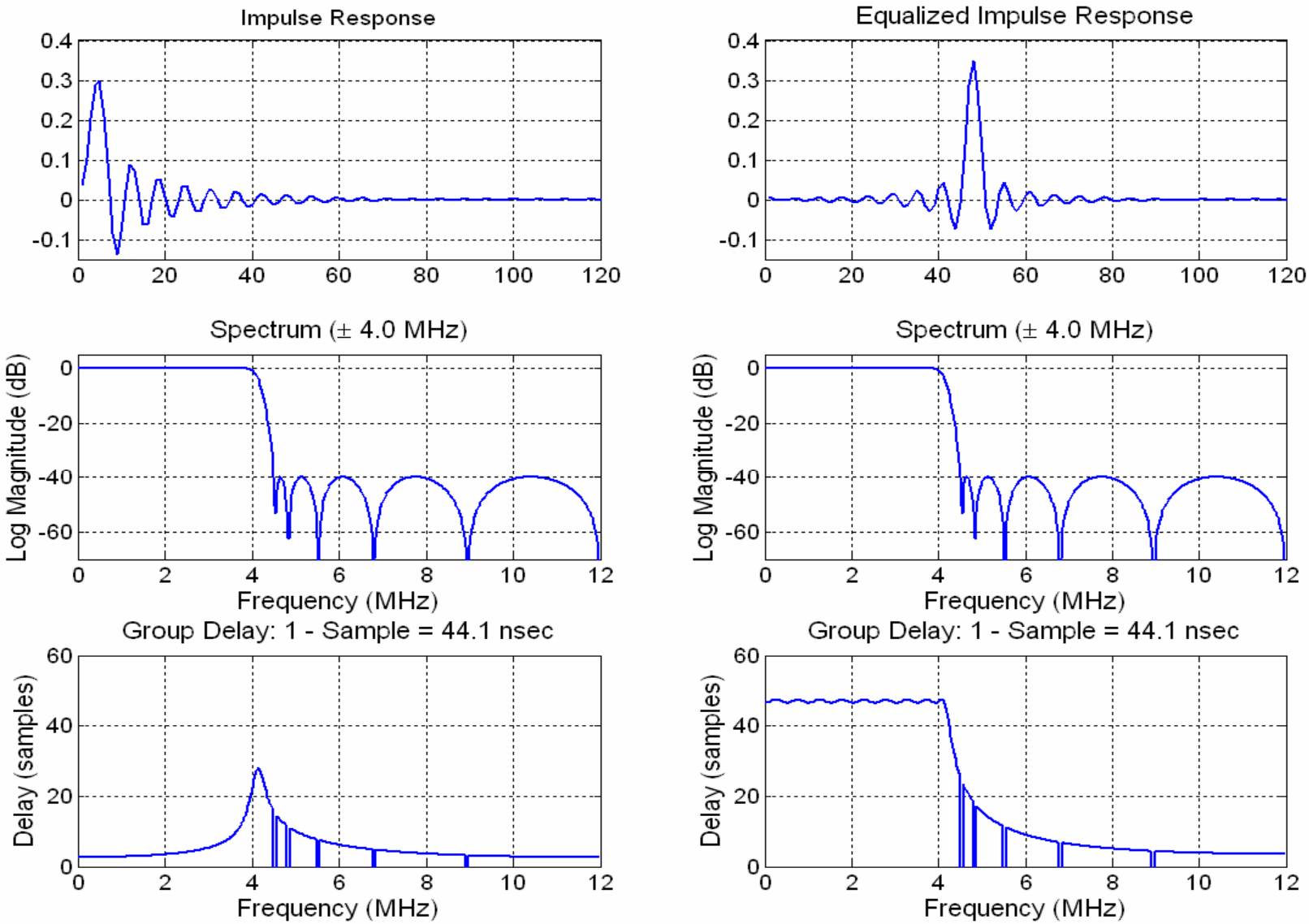

Spectrum and Group Delay
2- BW IIR Filters and Equalizers

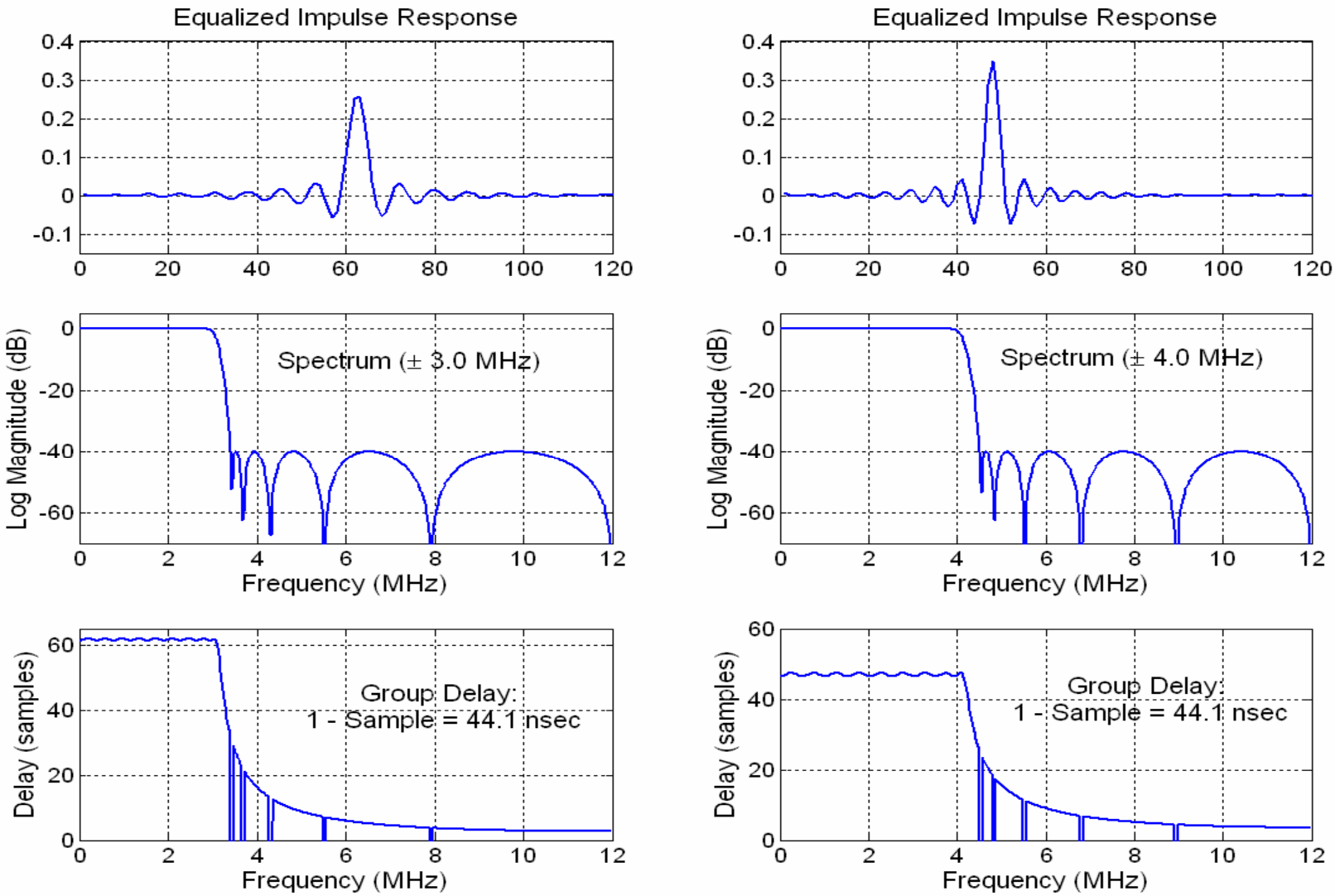

Pole-Zero Diagrams for IIR Filter and Equalizer

Roots: 11-Pole Inverse Tchebyschev, F_{co} = 4 MHz,

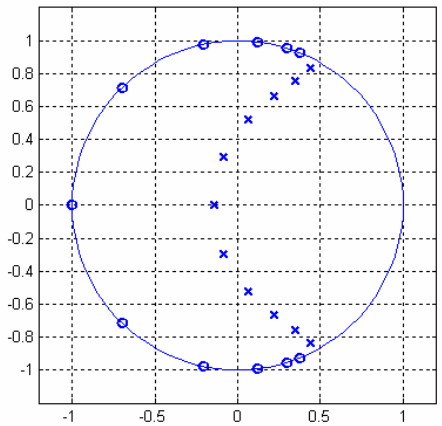

Roots: 11-Pole Filter, 16-Pole Phase Equalizer

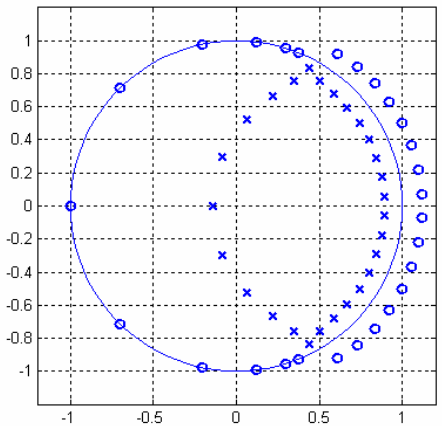

Roots: 11-Pole Inverse Tchebyschev, F_{co} = 3 MHz,

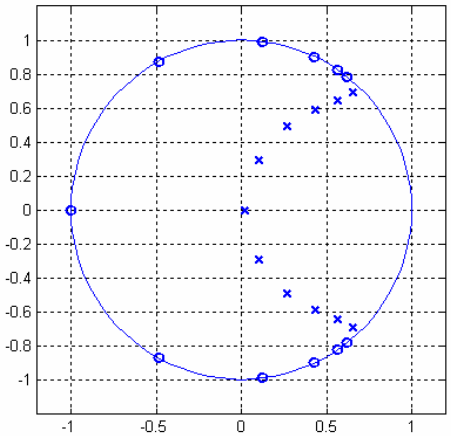

Roots: 11-Pole Filter, 16-Pole Phase Equalizer

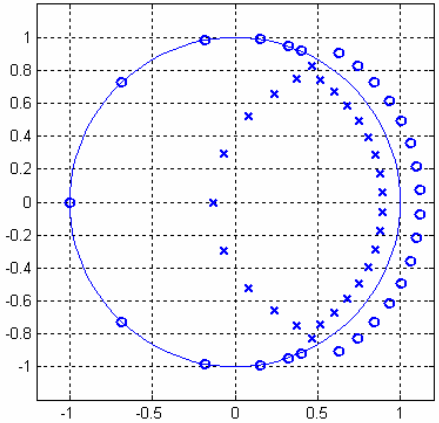

Filter Coefficient Variation with Filter Bandwidth

$$H(Z) = \frac{Z^2 + b_1 Z + 1}{Z^2 + a_1 Z + a_2}$$

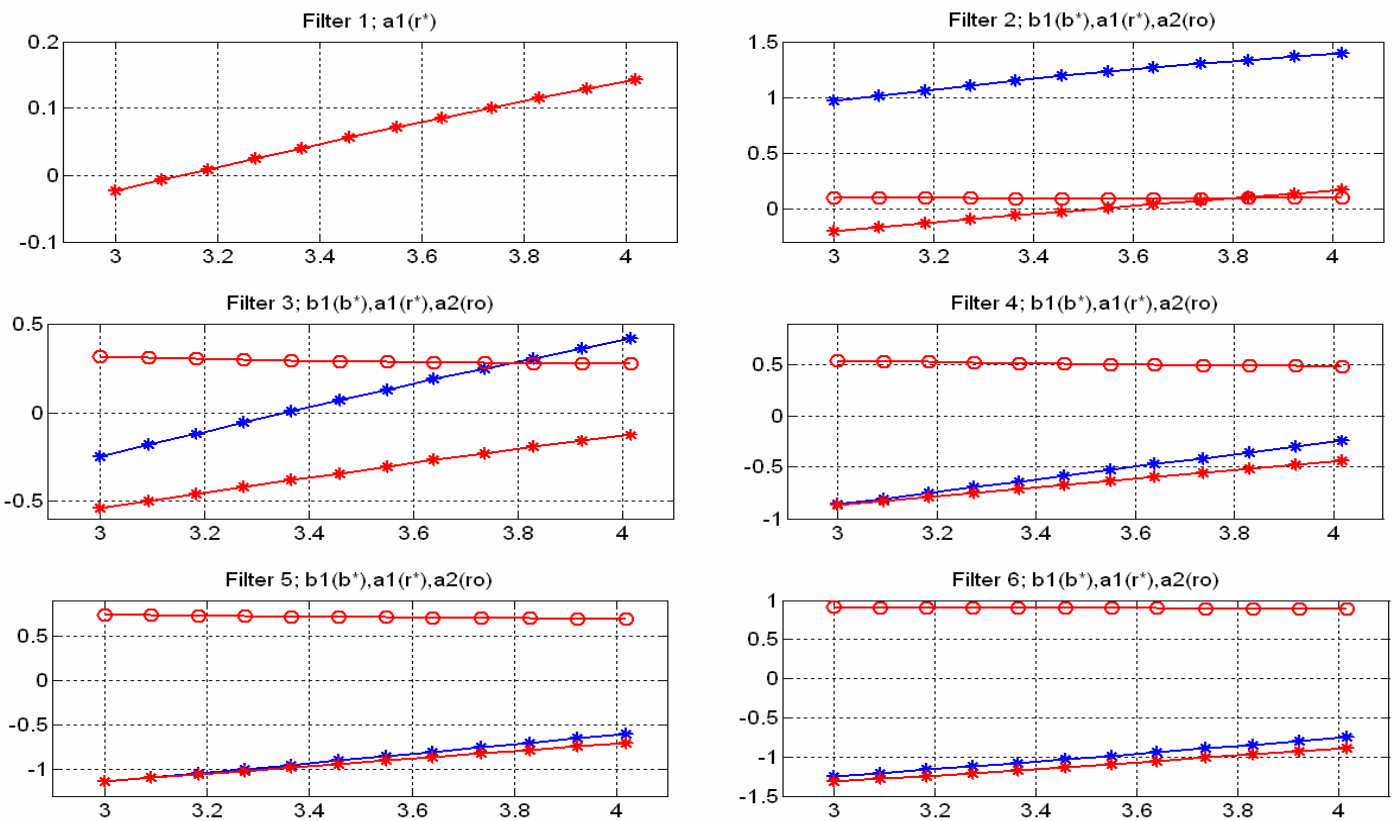

Equalizer Coefficient Variation with Filter Bandwidth

$$E(Z) = \frac{a_2 Z^4 + a_1 Z^2 + 1}{Z^4 + a_1 Z^2 + a_2}$$

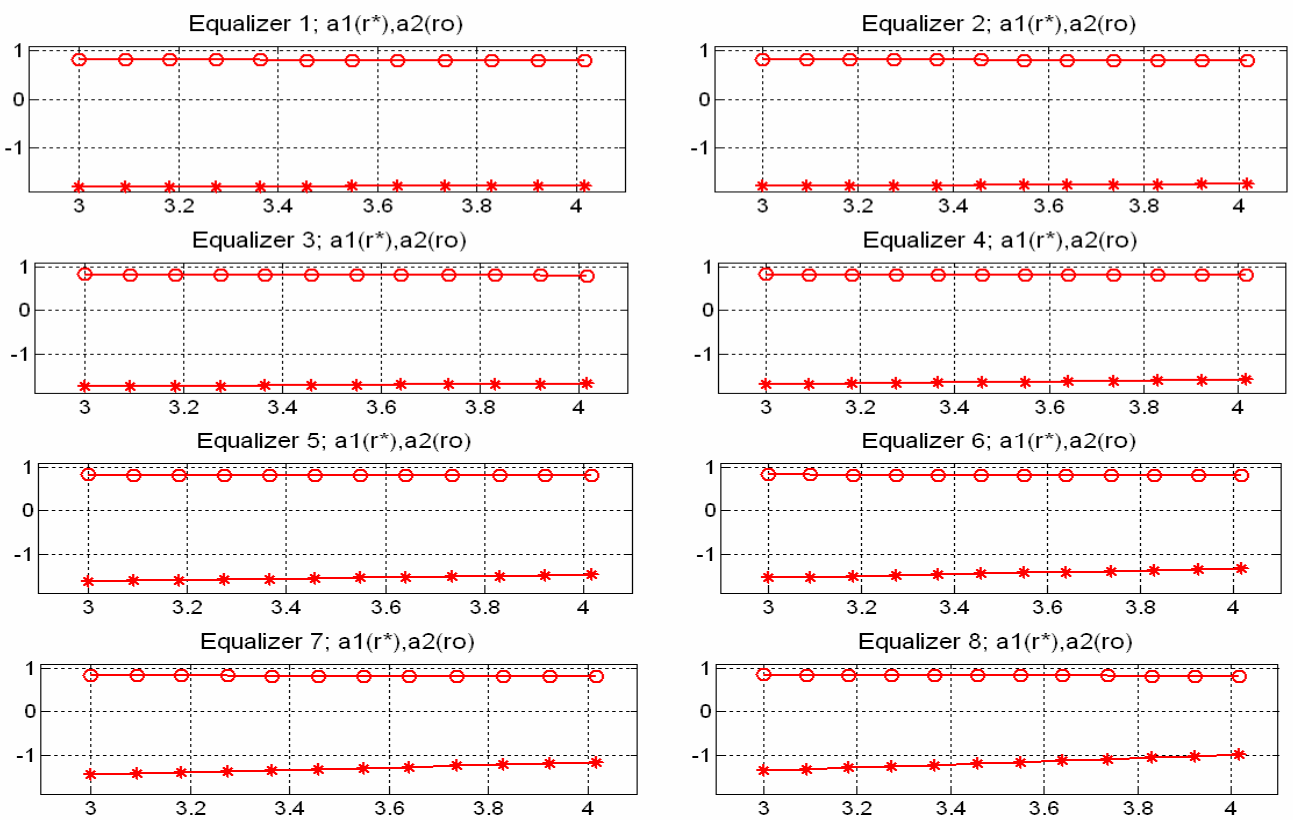

Recursive Filter for Variable Bandwidth with Companion All-Pass Equalizer

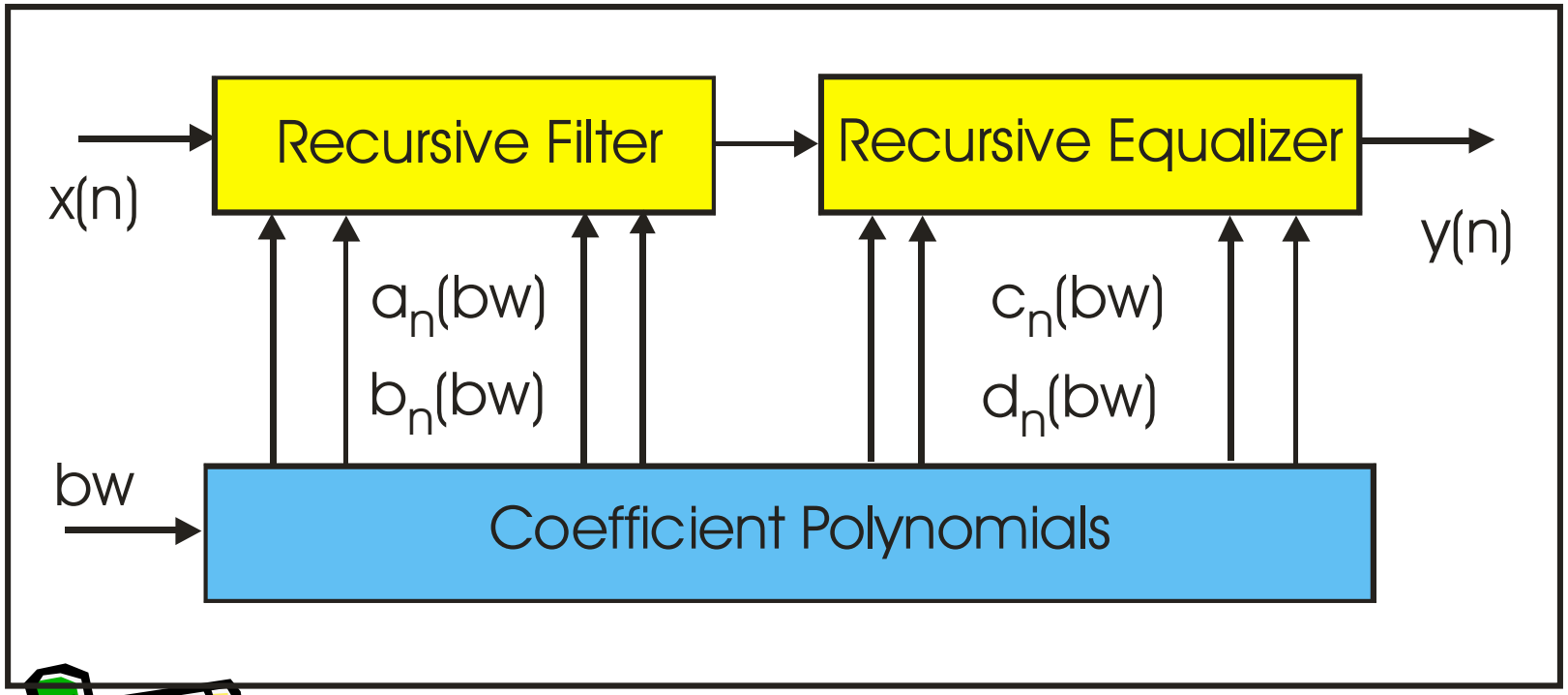

Compare FIR Filter and Equalized IIR Filter

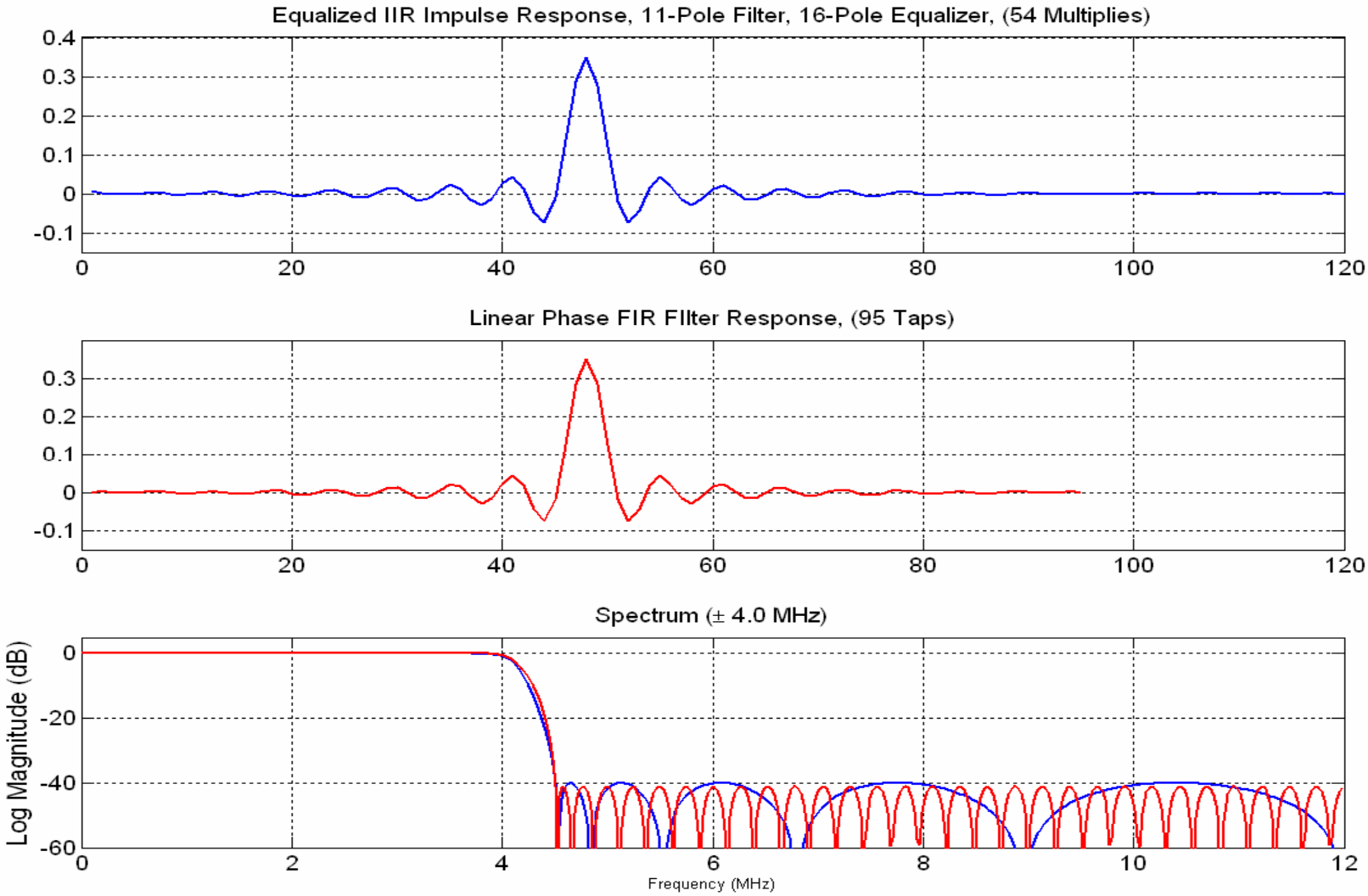

Narrower Bandwidth-> Longer Filter, Longer Filter -> More Taps

True for Fixed Sample Rate

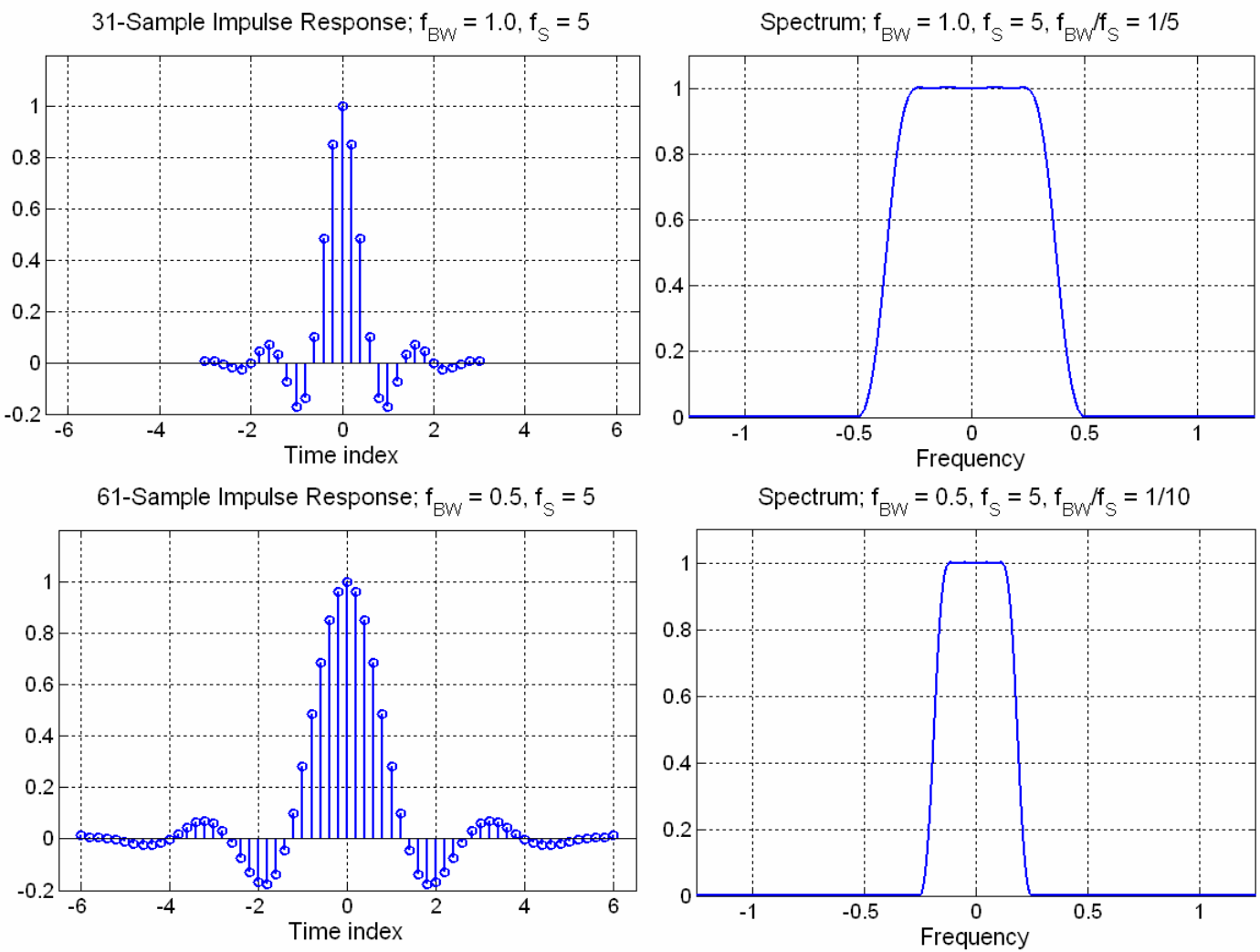

Narrower Bandwidth-> Longer Filter, Longer Filter -> Same Taps at Lower Sample Rate

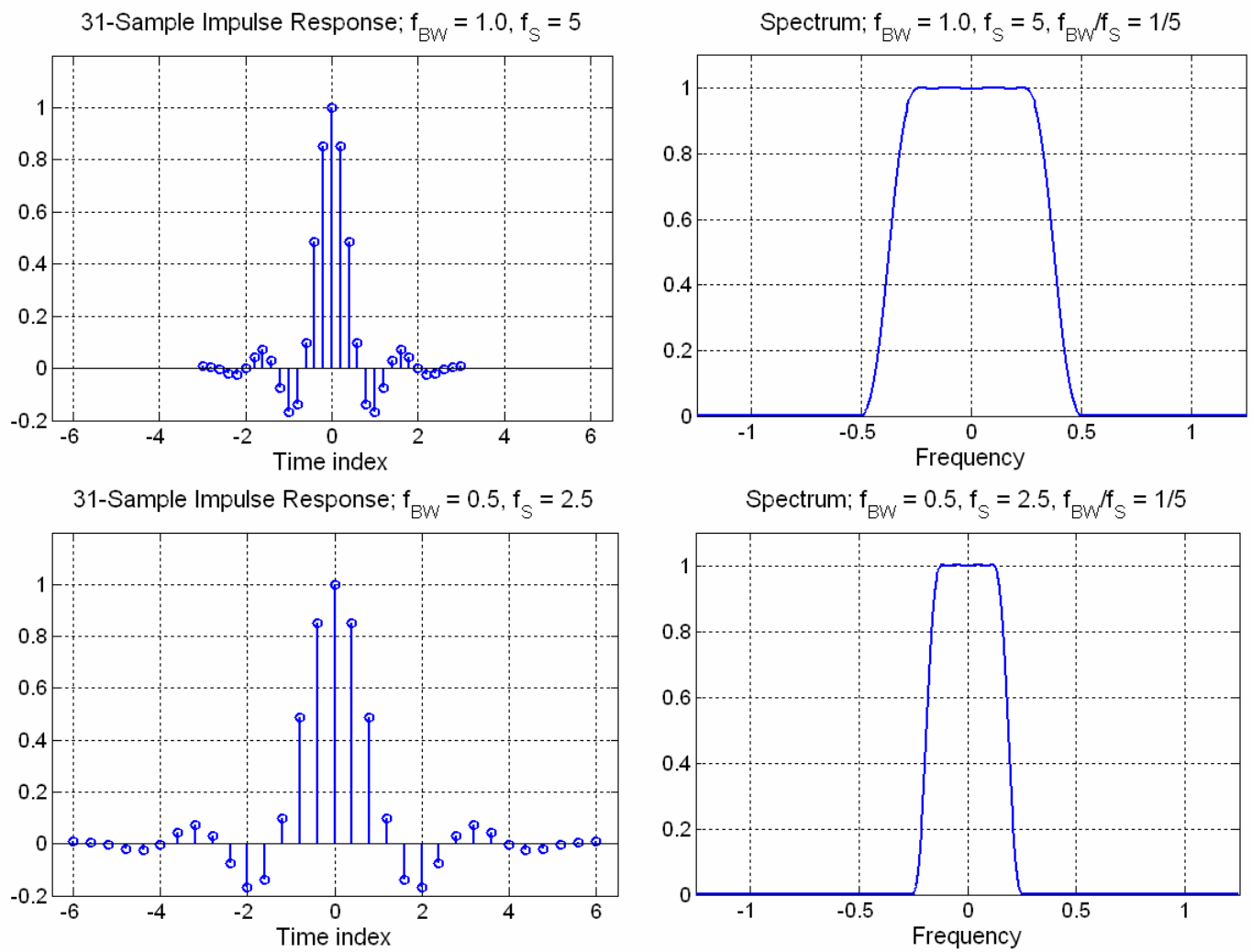

Continuously Variable Bandwidth FIR Filter with Fixed Number of Taps

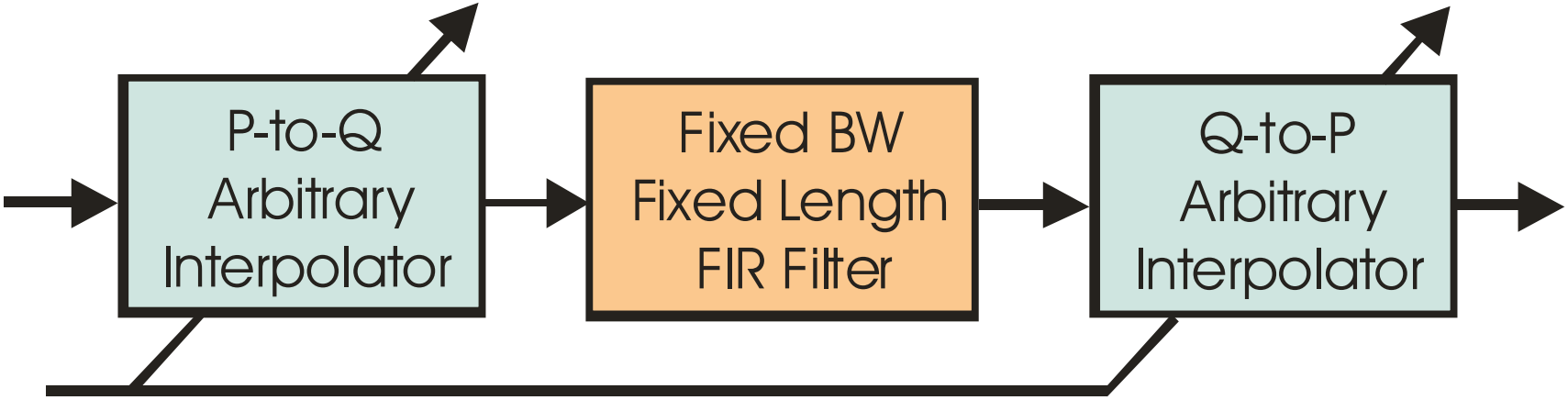

Spectra at Input and Output of the Three Processing blocks of the Variable Bandwidth Filter

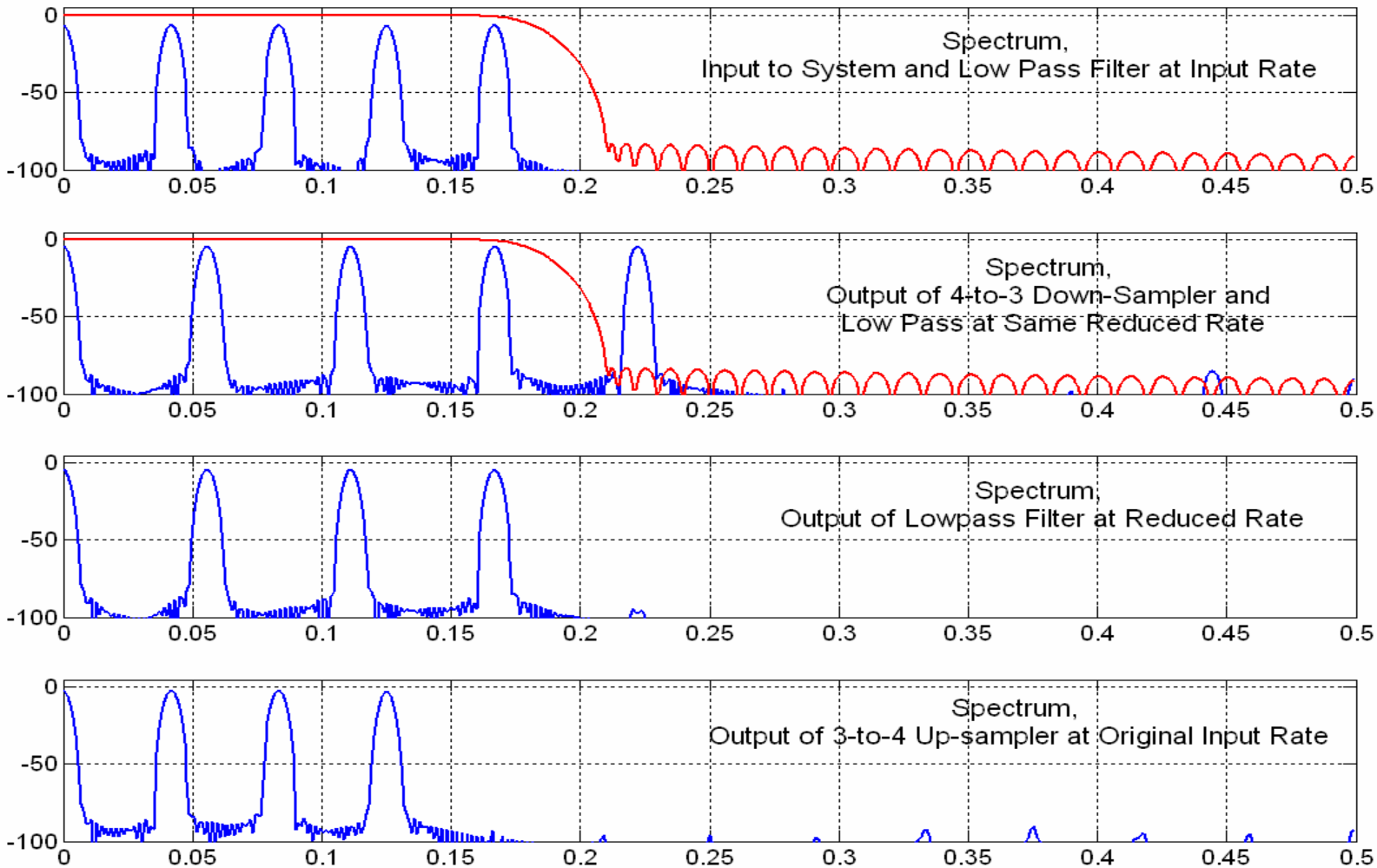

Impulse Response of Variable BW FIR Filter

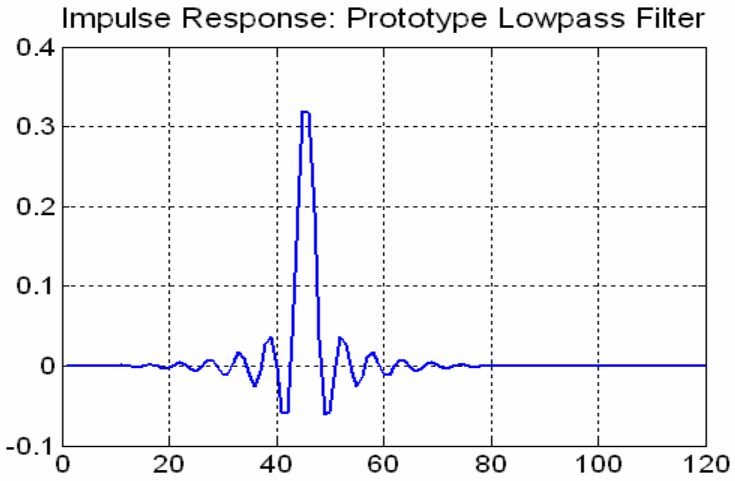

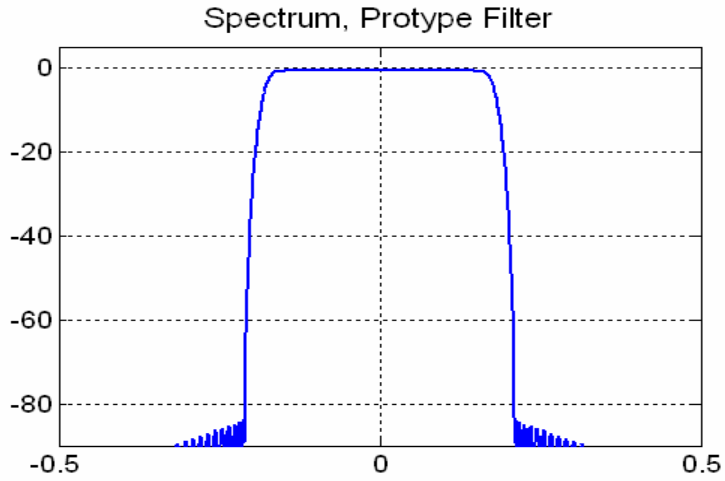

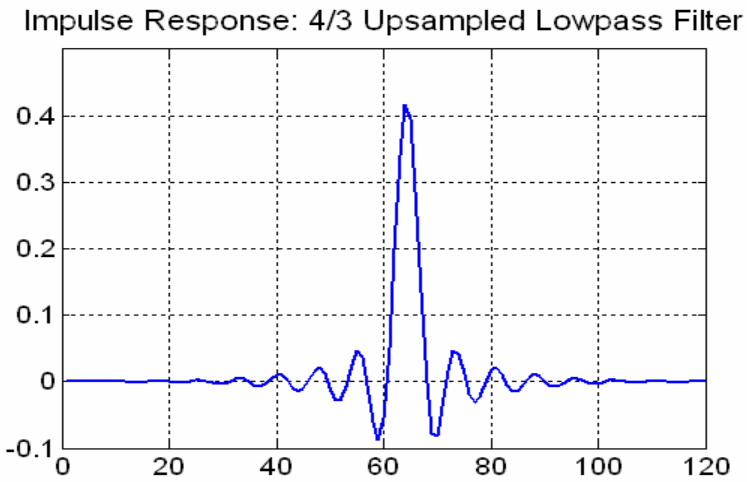

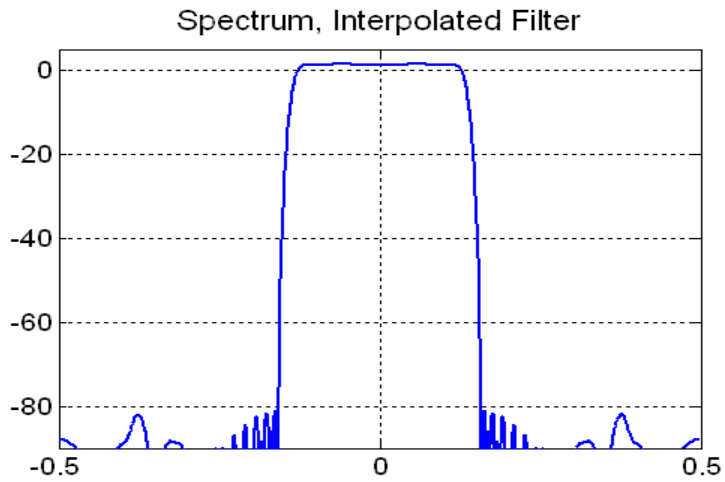

Power Amplifier Linearization

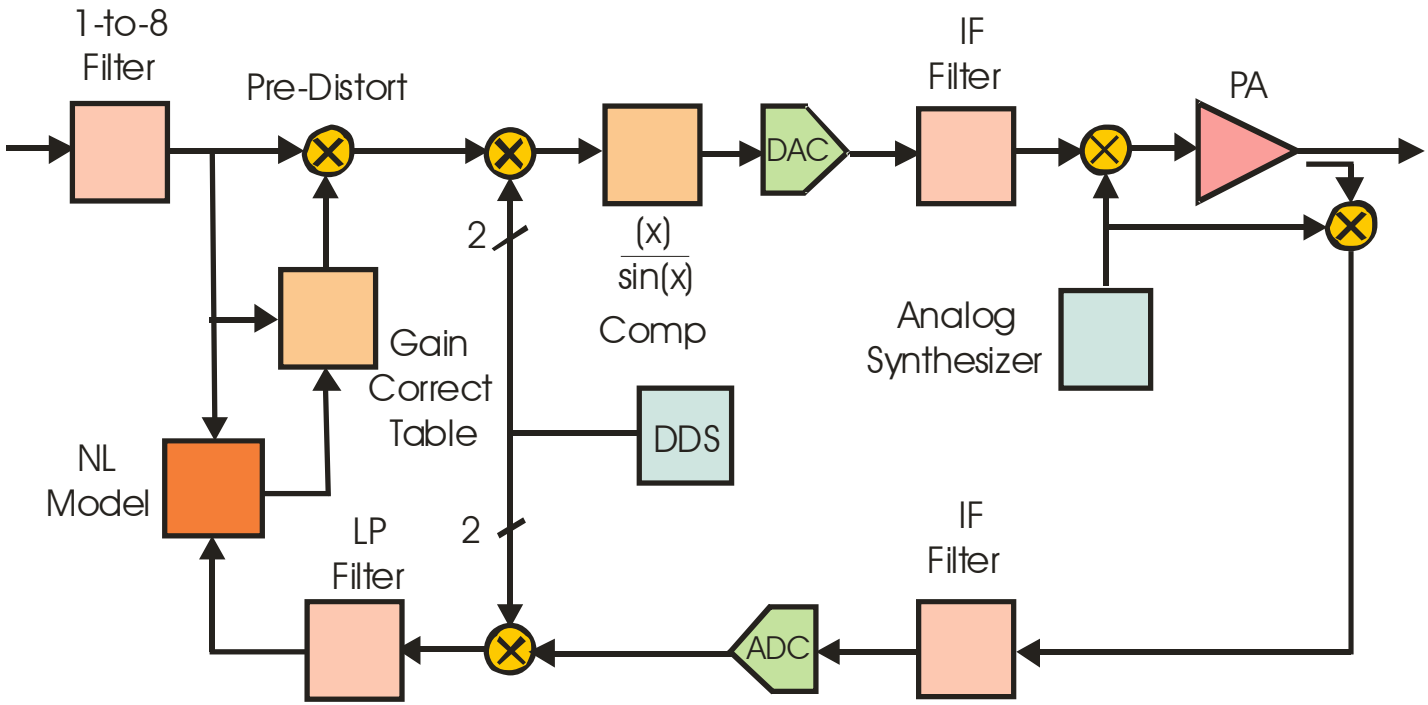

PA Linearization
Peak-to-Average Ratio Control

Non Linear Amplifier and Precompensating Gain

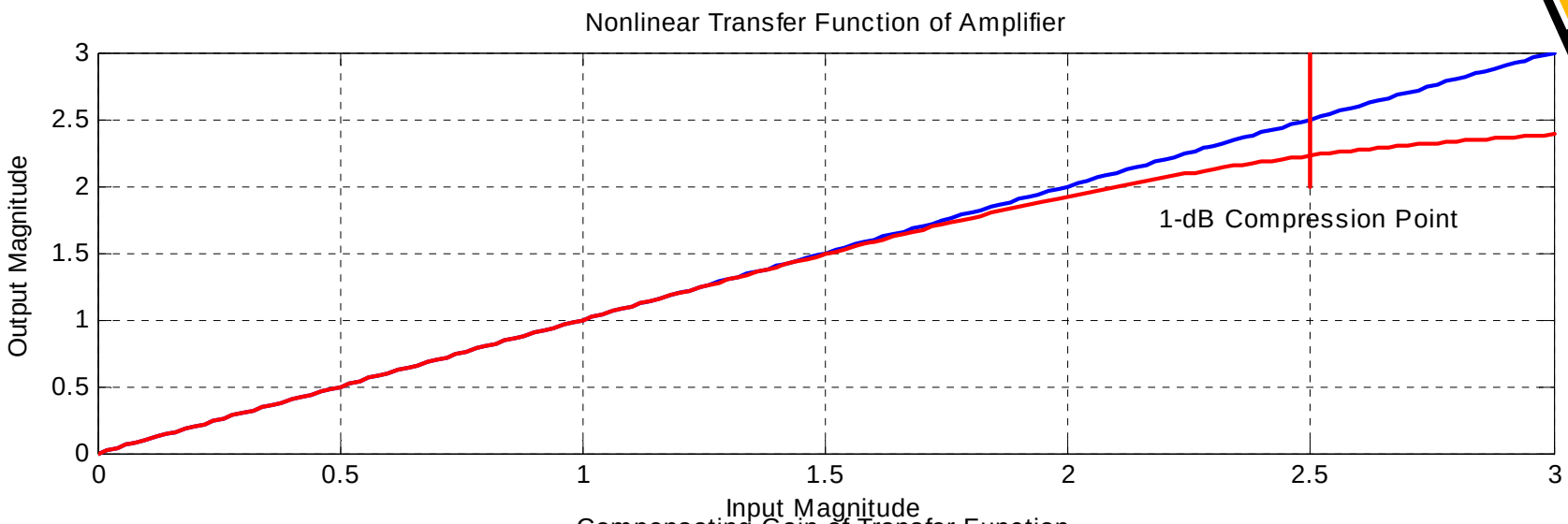

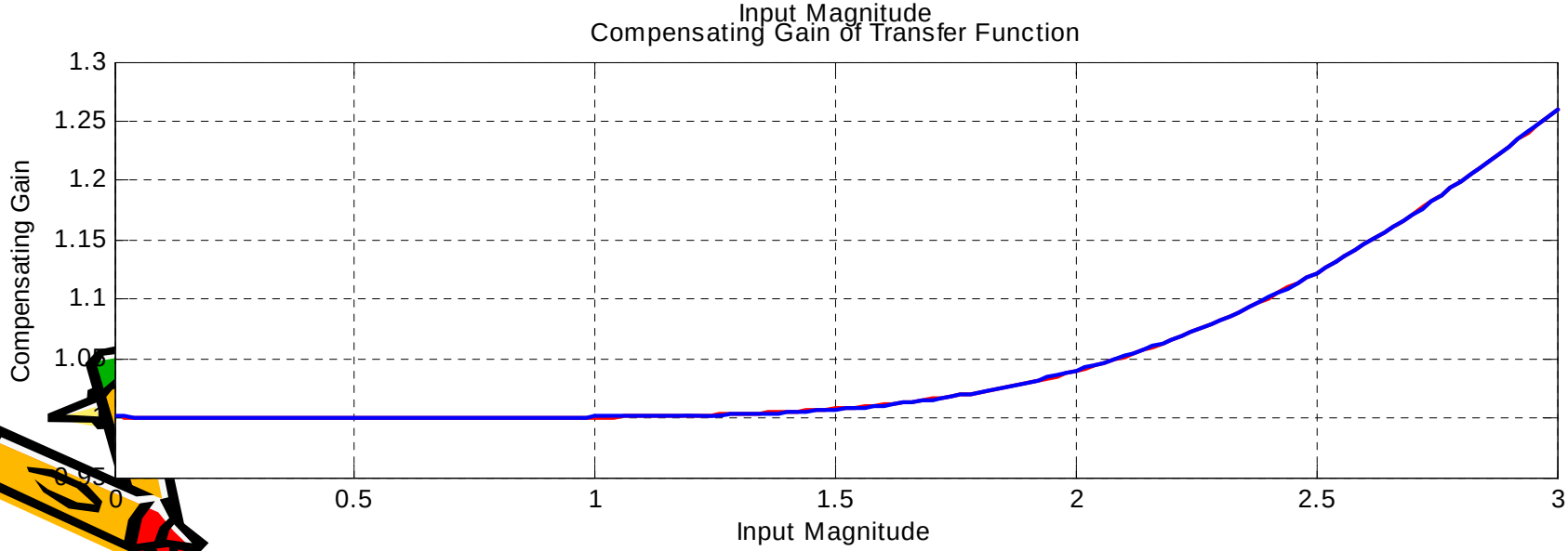

Transition Diagram Input and Output of Amplifier and input and output of Precompensator

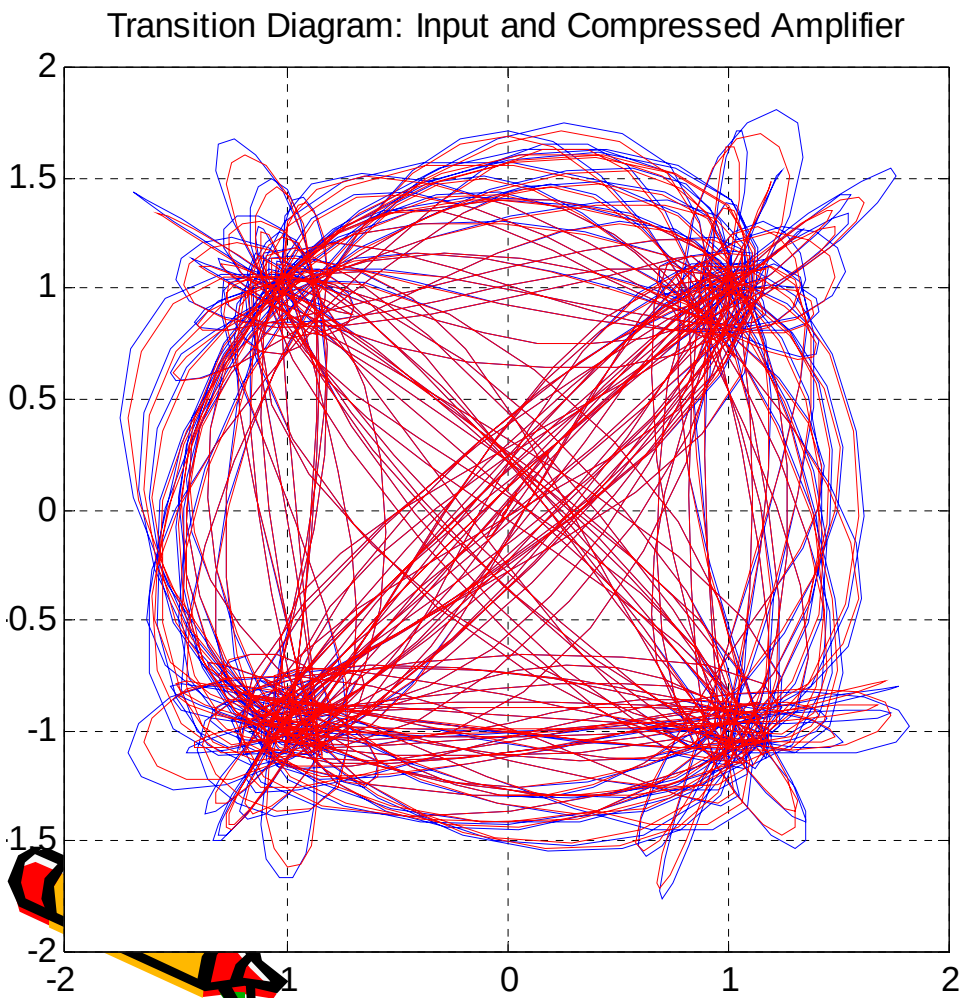

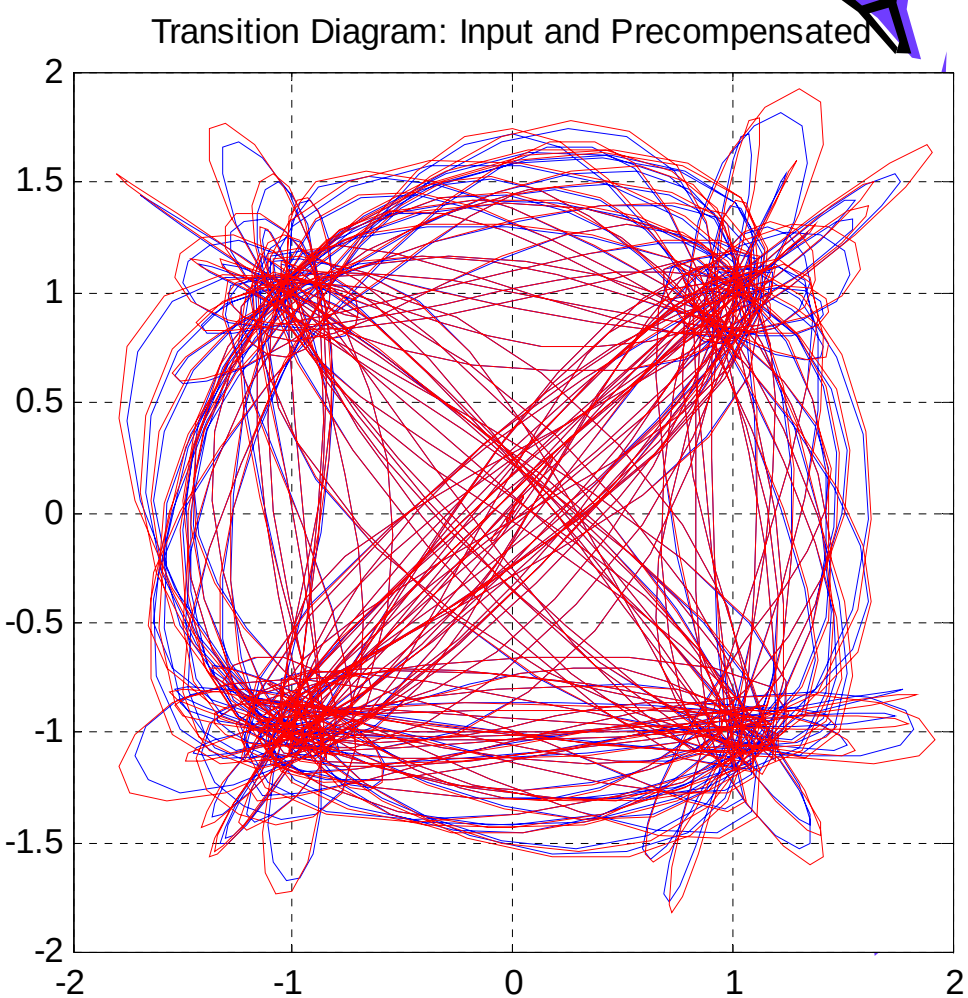

Spectra: Input and Output of Amplifier and Output of Precompensator and Precompensated Amplifier

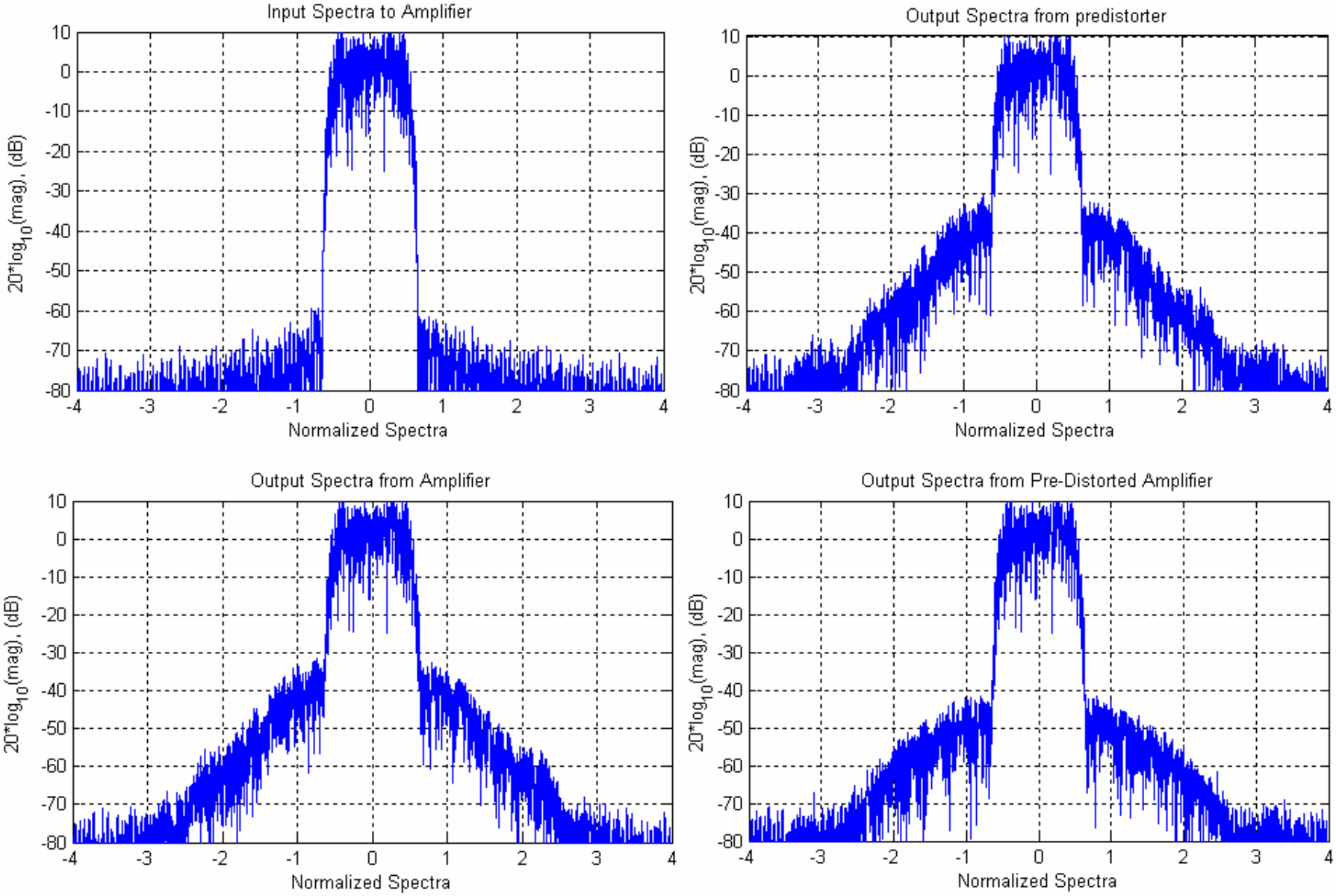

To Clip or Not to Clip; That is the Question!

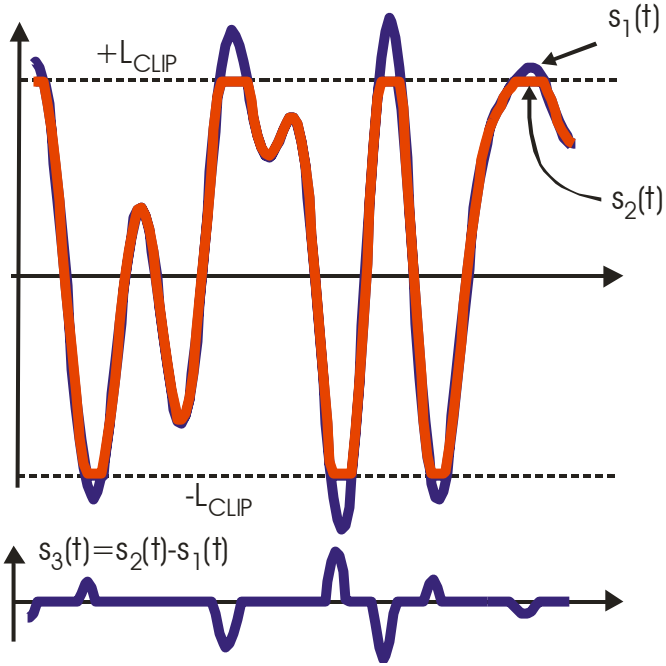

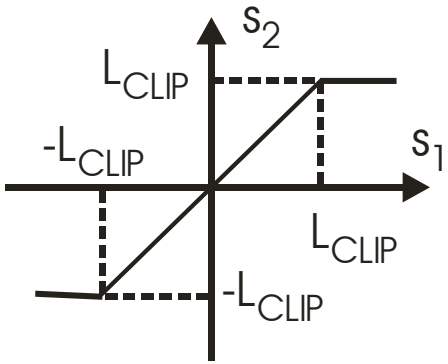

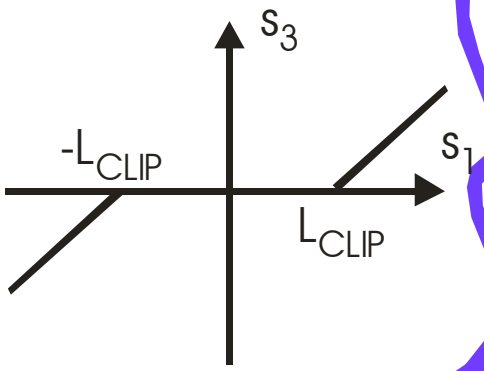

Band Limited Subtractive Clipping

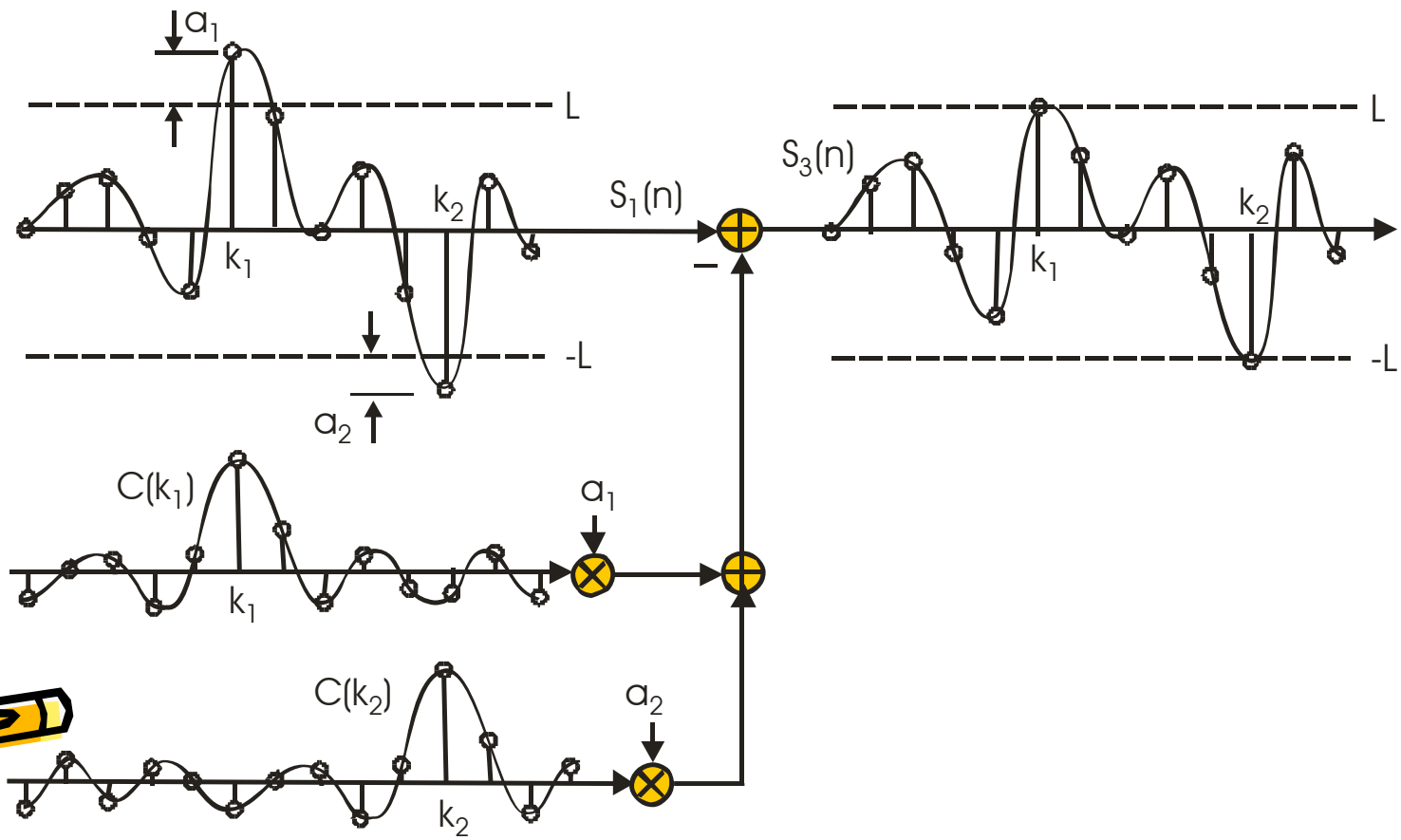

Band-Limited Clipping

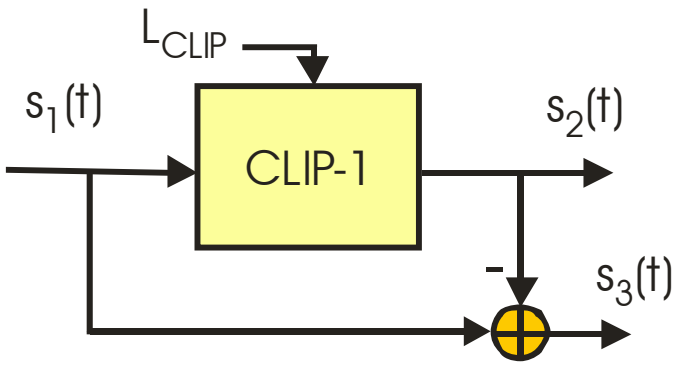

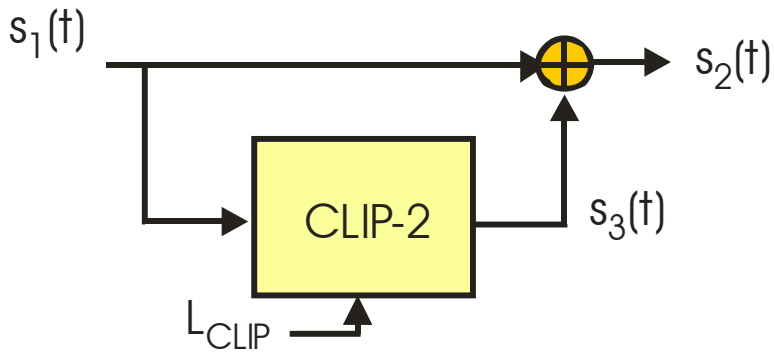

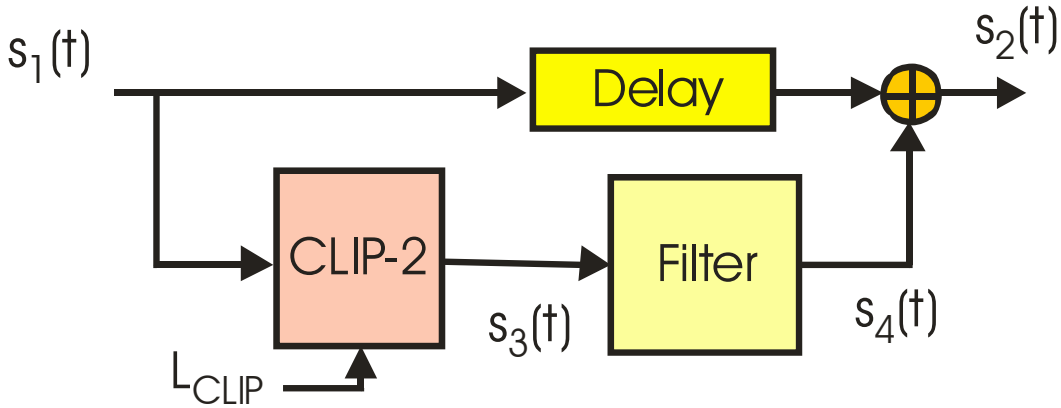

Spectra: Input Signal, Clipping Component and Clipped Signal

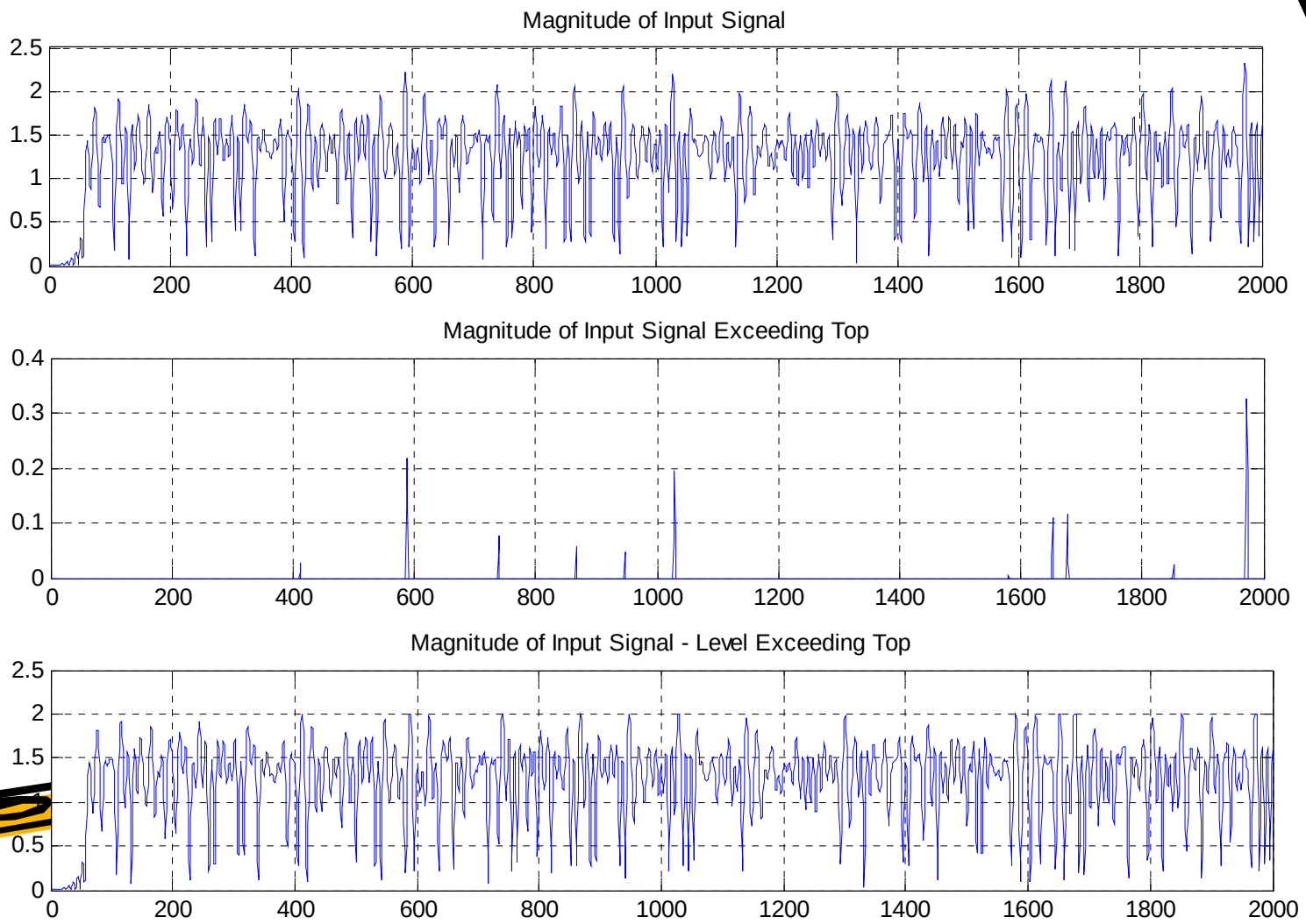

Spectra: Input Signal, Band Limited Clipping Component and Clipped Signal

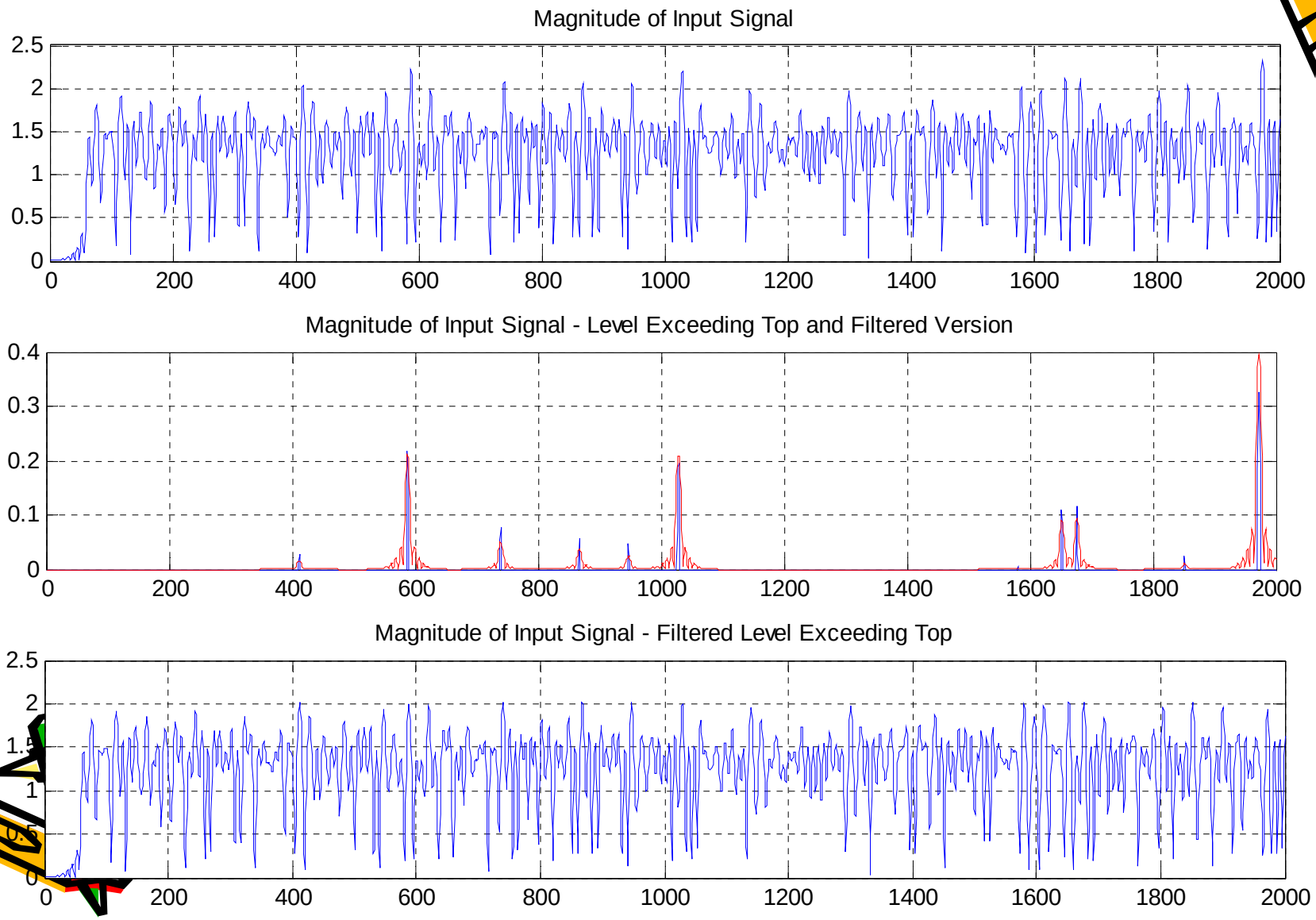

Spectra: Input, Clip Component, Band Limited Clip, and Band Limited Clip

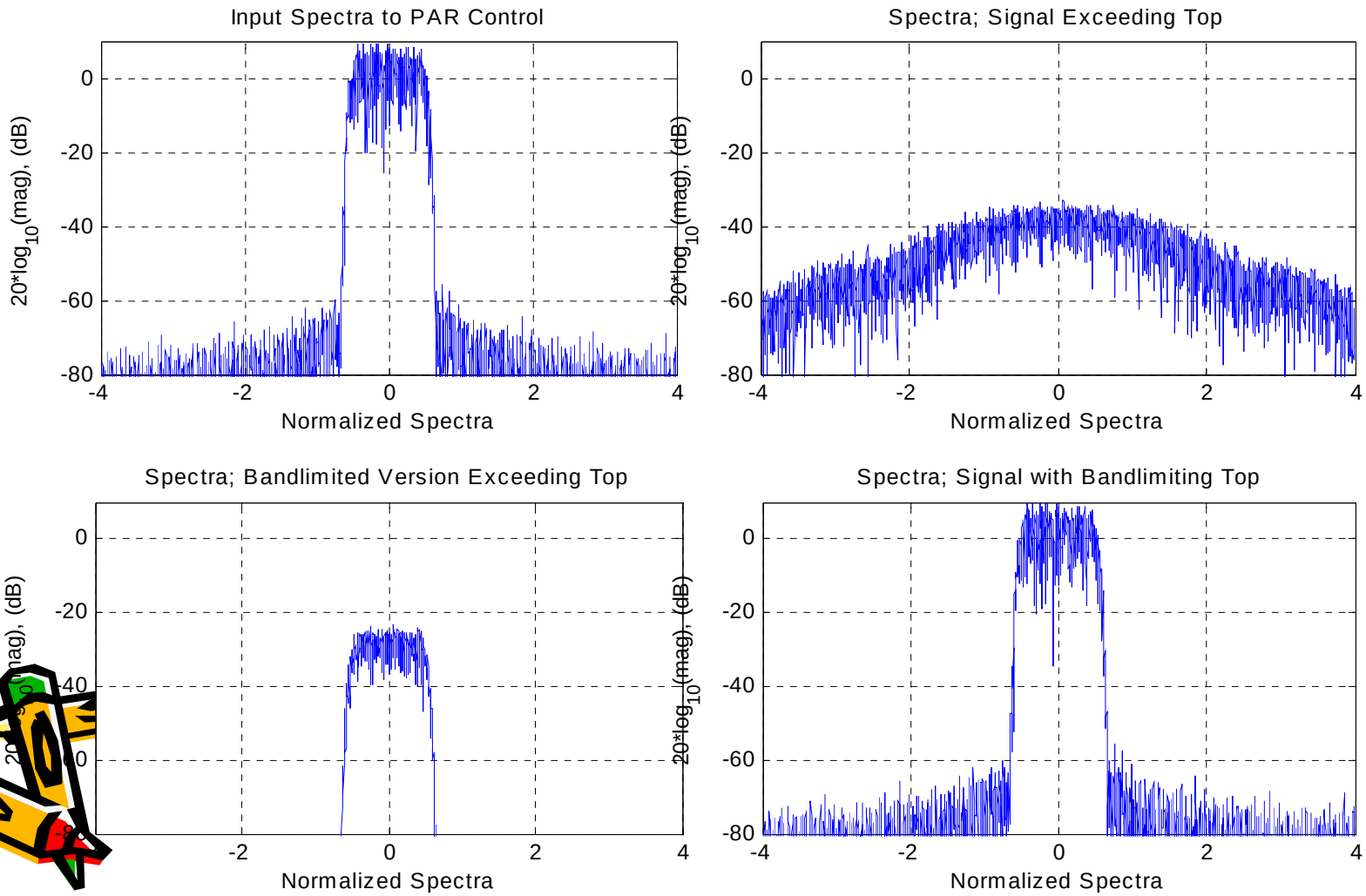

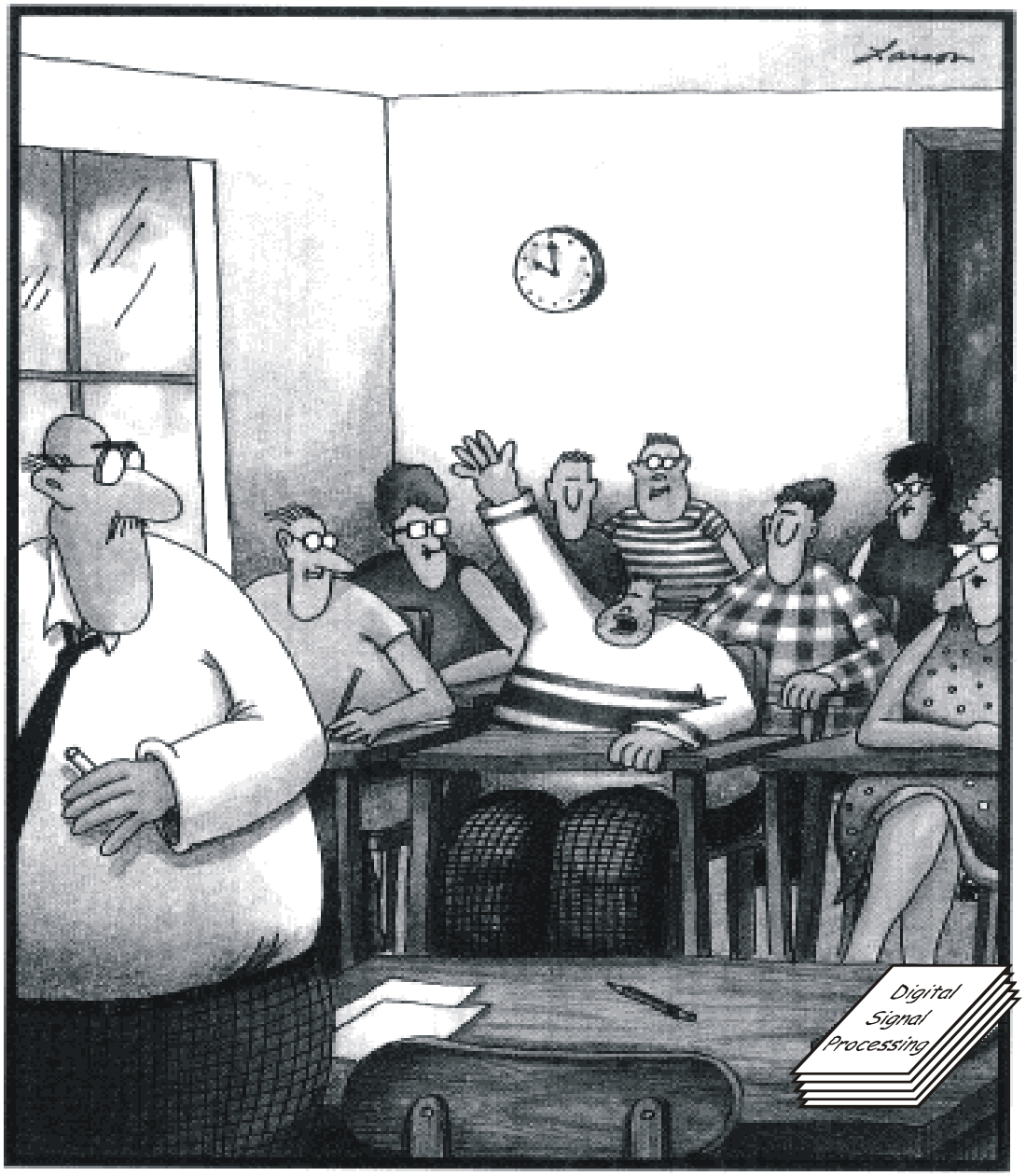

Professor harris, may I be excused?
My brain is full.

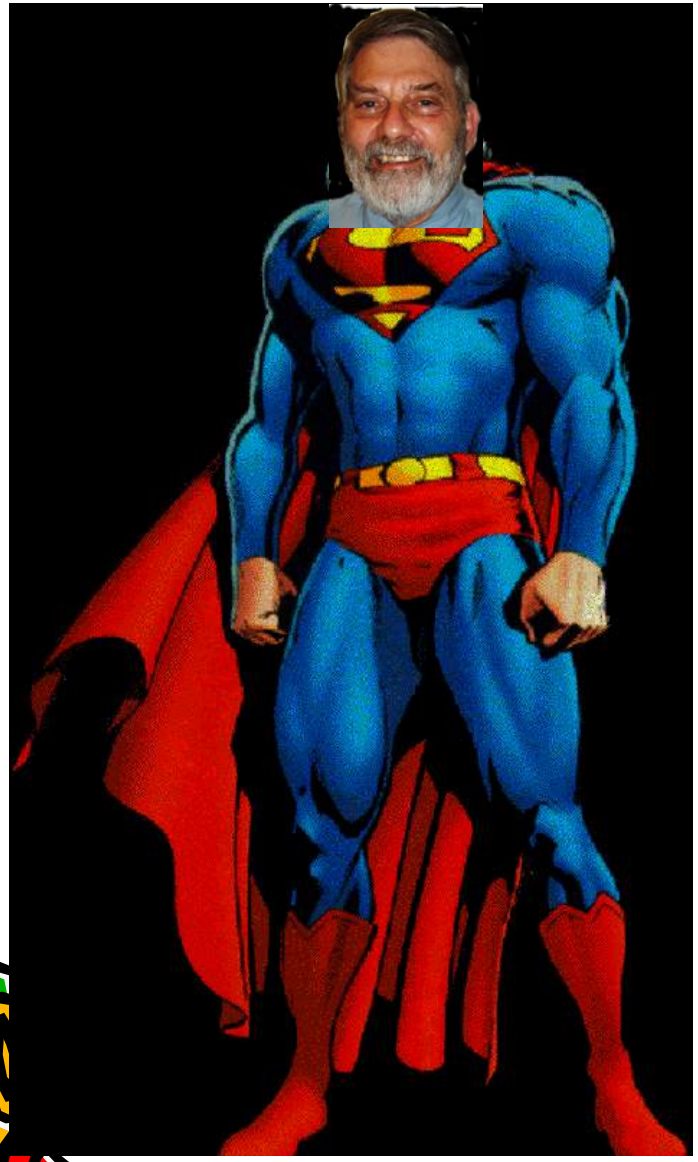

SOFTWARE
DEFINED
RADIO
MAN

Is Open For Questions